BLUELAVA

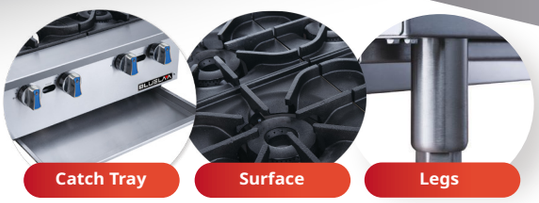

HOT PLATE
BLHP24 FOUR BURNER

PRODUCT DESCRIPTION

- *28,000 BTU Per Burner. Stainless Steel contruction with Ever-Ready Standby pilots.*
- *Lift Off 12" x 12" Cast Iron Burner Grates.*
- *Independent Manual controls every 12"*
- *Cool Touch Stainless Steel Landing ledge.*
- *Hot Plates are all Natural Gas (NG) Standard. LP conversion kit is included.*
- *Heavy Duty Stainless Steel construction.*
- *Full length seamless drip pan, easy to remove and clean.*

MODEL#	DIMENSION		
	Width	Depth	Height
BLHP24	24 in	28 3/4 in	12 7/8 in

* All measurement are presented in Inches

1 YEAR WARRANTY PARTS & LABOR

SANITATION C US

DETAILS & SPECIFICATIONS

HOT PLATE
BLHP24 FOUR BURNER

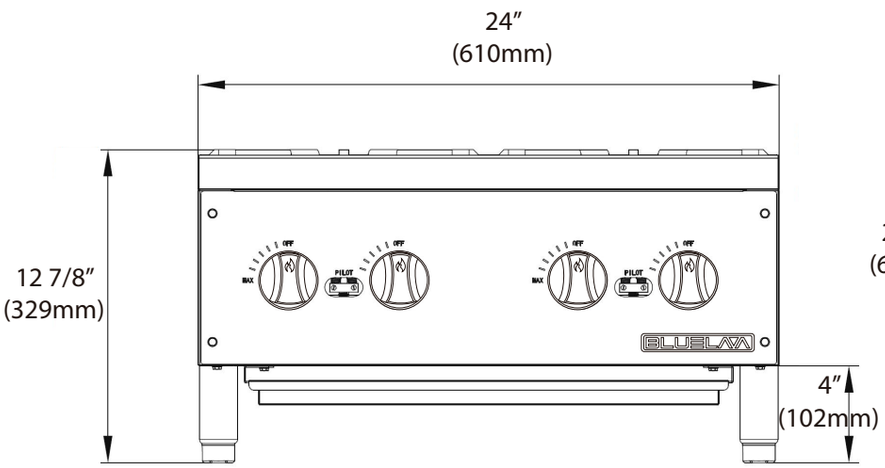

Front View

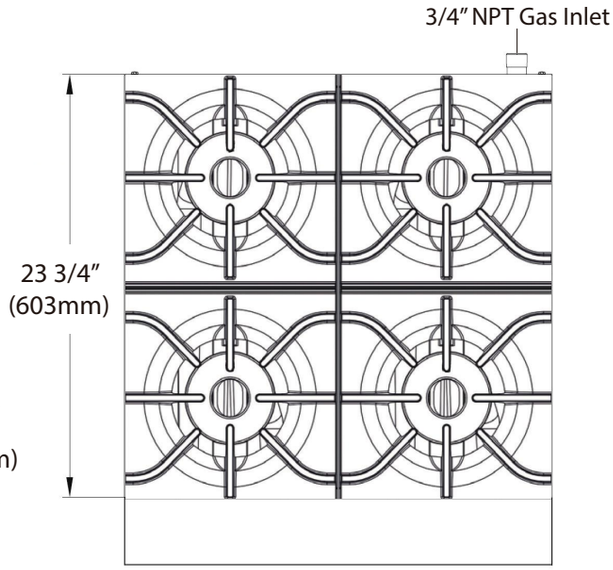

Top View

BLHP24	
GAS	NG/Propane
WORK AREA	23.82x23.62in
BURNERS	4
BTU/H PER BURNER	28000
TOTAL BTU/H	112000
GAS PRESSURE	NG: 4" WC Propane: 10" WC
NOZZLE	NG: 40# Propane: 52#
CONTAINER FITMENT	255

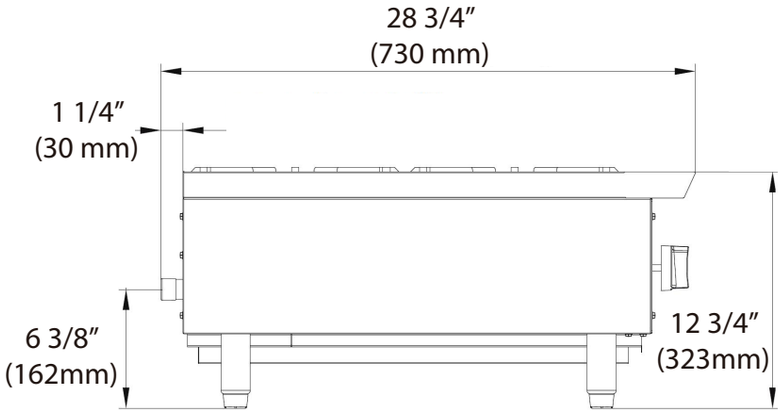

Side View

Model	Packaging Dimensions (inches)			Net Weight (lbs)	Ship Weight (lbs)
	W	D	H		
BLHP24	26 1/8"	32 5/8"	17 3/4"	110	143

orders@blueairfse.com

BLUELAVA

223 W. Rosecrans Ave., CA 90248
9 W. Shelton Terrace #A, Hillside, NJ 07205
7025 Amwiler industrial Drive, Suite A, Atlanta GA

T: 310-808-0102
T: 908-688-0970
T: 470-625-0182