STOCK POT
BLSP1

Catch Tray

Ventilation

Cast Iron Cooking Surface

Legs

Knobs

PRODUCT DESCRIPTION

- *Stainless Steel Pilots and tubing.*
- *Heavy Duty Cast Iron 3-Ring Burner. 80,000 BTU/H*
- *Each burner is equipped with two continuous pilots.*
- *Cast Iron top grates*
- *Manual controls operate inner and outer rings independently*
- *3/4" NPT rear gas connection and regulator standard.*
- *Stainless steel legs standard.*
- *Full length seamless drip pan for easy cleanup.*

MODEL#	DIMENSIONS		
	Width	Depth	Height
BLSP1	18 in	27 1/2 in	22 5/8 in

* All measures are presented in Inches

1 YEAR WARRANTY PARTS & LABOR

SANITATION C US

223 W. Rosecrans Ave. Gardena, CA 90248
T : 310.808.0102
F:310.808.0242

9 W. Shelton Terrace #A Hillside, NJ 07025
T : 908.688.0970
F : 908.688.8143

DETAILS & SPECIFICATIONS

STOCK POT
BLSP1

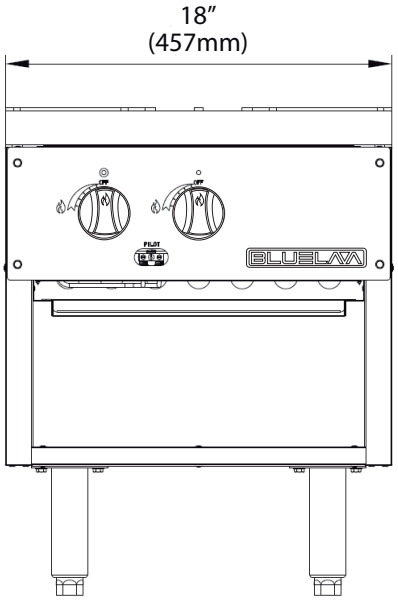

Front View

BLSP1	
GAS	NG/Propane
BURNERS	2
BTU/H PER BURNER	40,000
TOTAL BTU/H	80,000
GAS PRESSURE	NG: 5 "WC Propane: 10 "WC
NOZZEL	NG: #32 Propane: #48

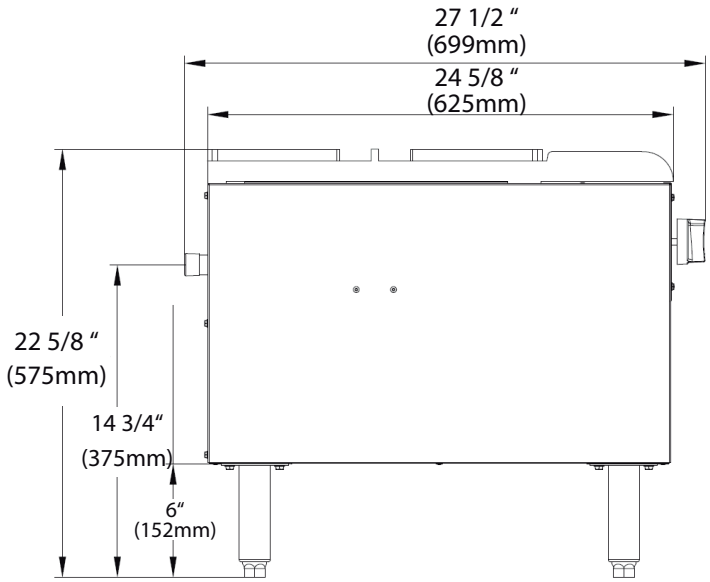

Side View

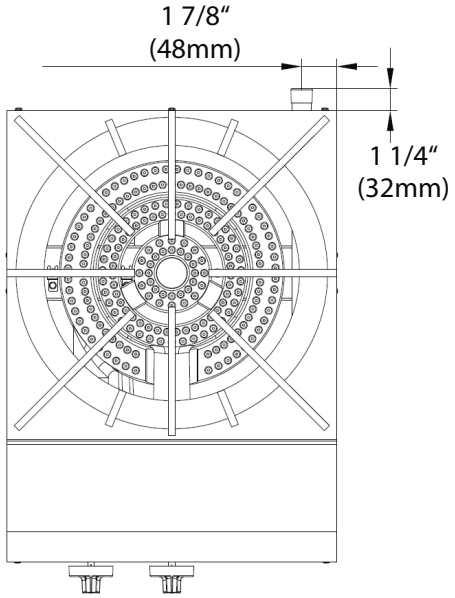

Top View

Model	Packaging Dimensions (inches) W	D	H	Net Weight (lbs)	Ship Weight (lbs)	Container Capacity 40' HQ
BLSP1	21 1/8"	30 7/8 "	24"	115	157	240

BLUELAVA
orders@blueairfse.com

223 W. Rosecrans Ave. Gardena, CA 90248
T : 310.808.0102
F:310.808.0242

9 W. Shelton Terrace #A Hillside, NJ 07025
T : 908.688.0970
F : 908.688.8143