Owner's Manual

MODEL L-1X & L-1X16

Installation & Operations

Rev 1.17

c UL us
LISTED
COMMERCIAL
DISHWASHER
864T

NSF

CMA DISHMACHINES
12700 KNOTT AVENUE
GARDEN GROVE, CALIFORNIA 92841

800-854-6417

FAX 714-895-2141

www.cmadishmachines.com

TABLE OF CONTENTS

MODEL CMA-L-1X & L-1X16

1. SPECIFICATIONS 2

1.1. L-1X & L-1X16 2

1.2. L-1X AND L-1X16 OPERATIONAL CYCLE 3

2. GETTING STARTED 5

2.1. INTRODUCTION TO THE L-1X AND L-1X16 5

2.2. RECEIVING AND INSTALLATION 6

2.2.1. Electrical 6

2.2.2. Plumbing 7

2.2.3. Installers Checklist 7

3. OPERATION 8

3.1. INITIAL SETUP 8

3.1.1. Check. 8

3.1.2. Chemicals 8

3.1.3. Filling the Machine 8

3.2. GENERAL 8

3.2.1. Pre-Scrapping 9

3.2.2. Proper Chemical Dosage 9

3.2.1. Proper Filling 9

3.2.2. Water Pump 9

3.2.3. Pump Cavitation 9

3.2.4. Deliming Dishmachine 10

4. MAINTENANCE 11

4.1. TIMER ASSEMBLY 11

4.1.1. Cam Adjustment 11

4.2. QUICK SERVICE GUIDE 12

4.3. TROUBLESHOOTING 13

5. ADDENDUM FOR MACHINES INSTALLED IN THE CITY OF CHICAGO . 16

APPENDIX A: OPERATOR & CLEANING INSTRUCTIONS 17

6. ELECTRICAL DIAGRAM 18

1. Specifications

1.1. L-1X & L-1X16

		METRIC EQUIVALENT
WATER CONSUMPTION		
PER RACK	1.7 GAL.	6.44 L
PER HOUR	40.8 GAL.	154.4 L
OPERATING CYCLE		
WASH TIME-SEC	58	58
RINSE TIME-SEC	32	32
DWELL TIME-SEC	30	30
TOTAL CYCLE	2 MIN.	2 MIN.
OPERATING CAPACITY		
RACKS PER HOUR	30	30
WASH TANK CAPACITY	1.7 GAL.	6.44 L
PUMP CAPACITY	35 GPM	132.5 LPM
WATER REQUIREMENTS	140°F	60°C
WATER INLET	½”	1.27cm
DRAIN CONNECTION	1”	2.54 cm
RECOMMENDED TEMP.	140°F	60°C
REQURED MINIMUM TEMP	120°F	52°C
FRAME DIMENSIONS		
DEPTH	23 ½”	59.69 cm
WIDTH	24”	60.96 cm
L-1X HEIGHT	30”	76.2 cm
L-1X16 HEIGHT	33 ¾”	85.73 cm
L-1X MAX CLEARANCE FOR DISHES	12 ¼”	31.11 cm
L-1X16 MAX CLEARANCE FOR DISHES	16”	40.64 cm
ELECTRICAL*	115 VAC 15.8 AMPS	
SUSTAINER HEATER (*Not* Booster Heater)	0.8 kW	
WASH PUMP MOTOR	13.4 AMPS	
MUST CONNECT TO DEDICATED SUPPLY CIRCUIT. **COMPLIANCE WITH LOCAL ELECTRICAL CODES MUST BE FOLLOWED.**		
SHIPPING WEIGHT		
L-1X (Approximate)	190#	86.2 kg
L-1X16 (Approximate)	195#	88.5 kg

Note: The required flowing water pressure to the dishwasher is 15-65 PSIG. If pressures higher than 65 PSIG are present, a pressure regulating valve must be installed in the water line to the dishwasher (by others). If flowing pressure is lower than 15 psi, improper machine operation may result.

1.2. L-1X and L-1X16 Operational Cycle

The L-1X and L-1X16 Operational Cycle has a total cycle time of 2 minutes (120 seconds). The Timing Diagram and the steps listed below detail the individual functions that are executed during each Operational Cycle.

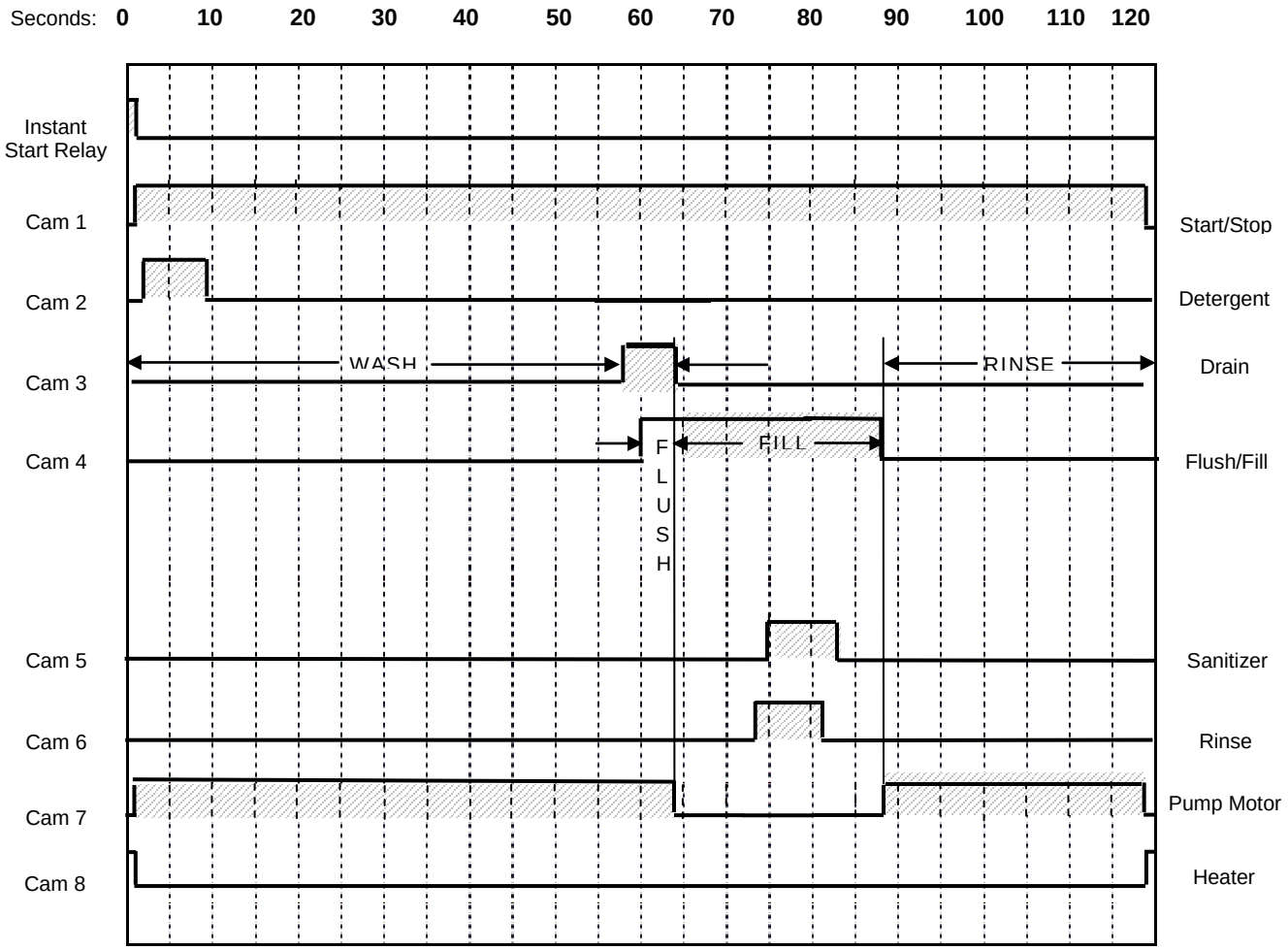

1. With the machine powered up, toggling the START switch begins a cycle.

   a) Toggling the START switch energizes both the cam timer motor and the instant start relay. The instant start relay latches ON the power to the cam timer motor so that the START switch can be released a moment after it has been toggled without the cam timer motor losing power.

   b) After about 2 seconds, Cam 1—the Start cam—latches ON the power to the cam timer motor and drops out the instant start relay. The cam timer motor continues to run for a total of 2 minutes, at which time it switches OFF—resetting the cam timer—and waits for the next start command.

2. Cam switch 7 controls the pump motor. The pump motor comes ON at the beginning of the operational cycle and continues to run until the end of the drain function (controlled by cam switch 3), at which time it turns off for about eight seconds allowing time for the machine to refill enough to avoid running the pump dry before the pump motor restarts and runs to the completion of the operational cycle.

   The pump motor runs the pump for the 58-second wash cycle, then pumps the water out through the drain, turns off (allowing the machine to refill with clean rinse water) and then runs the pump for the 32-second rinse cycle.

3. Cam switch 3 controls the drain function. At the end of the 58-second wash cycle, cam switch 3 energizes the drain valve solenoid allowing the pump motor to drain the wash water out of the machine. Cam switch 3 also increments the rack counter by one each cycle.

4. Cam switch 4 controls the water valve solenoid on the water supply to flush and fill the machine. At the end of the wash cycle the drain valve is opened, the pump motor continues to run (to pump the wash water out through the drain), and the Flush function begins. At first, flushing the machine because the drain valve is still open, then—with the drain valve closed and the pump motor stopped— the machine begins to fill for the rinse cycle. Once the machine has refilled sufficiently, the pump motor restarts carrying out the rinse portion of the cycle as the filling of the wash tank completes.

5. Cam switch 2 controls the detergent pump and turns ON about 5 seconds after the operational cycle is started and runs for a few seconds to provide sufficient detergent for the wash cycle. This cam can be adjusted as necessary for proper detergent dosage.
   See section **4.1.1 Cam Adjustment**

6. Cam switches 5 and 6 control the sanitizer and rinse pumps respectively. They turn ON at the beginning of the rinse cycle and run for a few seconds to provide sufficient sanitizer and rinse aid for the rinse cycle. These cams can be adjusted as necessary for proper chemical dosage. See section **4.1.1 Cam Adjustment**

7. Cam switch 8 operates the optional sustainer heater. This cam assures that the sustainer heater only turns on when the dishmachine is *not* in a cycle. This prevents the machine from drawing too much electrical current at any one time.

2. Getting Started

All sections of the manual address both the L-1X and the L-1X16. Separate information on each machine is only provided where differences exist between the two models.

2.1. Introduction to the L-1X and L-1X16

The L-1X and L-1X16 low temperature Dishmachines are unique in their field; they have all the features of a standard commercial size machine packed into an under-counter, standalone dishmachine.

Operation of the L-1X and L-1X16 are extremely easy. After initially filling the machine (see section **3.1.3 Filling the Machine**), toggling the Fill/Start switch to the "START" position begins the Operational Cycle, which runs automatically.

To reduce service time, all electrical components are mounted in a sliding drawer for easy access. This "Works-In-A-Drawer" can be removed by unplugging a single connector for easy serviceability.

The only external connections necessary are the power source, water supply and drainpipe.

There are also accessories that can be chosen when desired such as the optional sustainer heater and 6" legs. The optional sustainer heater with thermostat is extremely practical for maintaining wash tank temperature between cycles. The 800 watt heater will hold the wash tank temperature between 130°F and 140°F while the machine is not being run. See parts manual for the parts list and accessories available for the machine.

The supply water to the L-1X and L-1X16 must be a minimum of 120°F. The pipe supplying the water must be ½" minimum. The plumbing connection is located at the back of the machine. The drain is a 1" barbed fitting located at the back of the machine for easy attachment of your drain hose. See section **2.2.2 Plumbing**.This manual is structured to provide a complete reference guide to the L-1X and L-1X16. It is presented in a manner that all users will be able to comprehend and use as an effective tool in supporting the installation, operation and maintenance of the dishmachine. The first section provides the specifications and details of the operational cycle. The next section explains how the machine is packaged and what to look for when receiving the machine. After unpacking the machine, this manual explains how to install and set up the machine for use. Requirements are given for plumbing, wiring, and space considerations. The Operation section of the manual may be used for instruction and procedures when required. We make this portion of the manual easy to understand so that all levels of operators may be able to read and comprehend the operation of the machine. The function of the machine itself is mostly automatic and takes little training to put into full operation. The Operation section also includes diagnostic considerations for the machine if problems occur.

CMA warranties the workmanship of the machine.

DISCLAIMERS

CMA expressly disclaims any and all warranties, express or implied, relating to the installation of any and all CMA equipment that is installed by chemical dealers, contracted servicers or third party servicers to CMA equipment. If the installation instructions are not followed exactly (to the letter), or, if any person or company conducting the installation of the CMA equipment, revise the installation procedures or alter the instructions in any manner, the CMA warranty becomes void. If, due to the improper installation of CMA equipment, this equipment ceases to operate properly or affects other parts of the CMA dishwashing equipment, in that the other parts become defective, the CMA warranty becomes void. CMA will not be liable or responsible or warrant CMA equipment, due to improper installation of any CMA model dishwasher.

CMA does NOT endorse "Tankless On-Demand" water heaters for use on CMA Dishmachine products. On most applications, the volume of hot water required for commercial dishmachines exceeds the capacity of these types of heating sources. You will find that most, if not all, commercial dishmachines have been programmed with auto-filling features that require quick filling, with a designated limited time.

CMA DOES endorse, and highly recommends, the standard "tank" style water heaters, sized properly to handle each particular facility with their water heating requirements. A "tank" style water heater stores and supplies a large capacity of preheated water before providing hot water to the dishmachine. To meet required health codes, there must be a reliable and consistent flow of adequate hot water supplied to the dishmachine. If the facilities' "tank" style water heater is marginal in size, CMA recommends installing a proper size Hatco Booster Heater, a CMA's E-Temp 40 or 70-degree-rise Booster Heater (that can be installed on CMA Conveyors), or a CMA Temp-Sure Booster Heater (for door and undercounter dishmachines). All are designed to adequately achieve results.

Warning: cancer and reproductive harm – www.P65Warnings.ca.gov

2.2. Receiving and Installation

The dishwasher is shipped from the factory in a corrugated box on a wooden pallet. The installation guidelines give a systematic procedure for setting up the machine.

1. Start by removing the box and packaging material. Check for the following component parts:

   A. Drain Screen:

   The Wash Tank Scrap Screen is shipped inside the wash cavity of the machine. This screen must be in place during operation. It has been designed to perform two basic functions:

   - Strain water that is circulating through the spray arms and pump assembly.
   - A basket to catch heavy solids or broken glass that may plug the impeller.

   B. Spray Arms

   The end caps on the spray arms have been taped to protect them in shipping. Remove the tape from the spray arm end caps.

   C. Tube Stiffeners:

   The tube stiffeners must be used to prevent the feed tubes from curling up inside the chemical pail allowing the tip to rise out of the chemical. Remove the tie-wraps securing the tube stiffeners to the dishmachine to free them up for use. Be careful not to remove any of the tie-wraps securing the tube bundle.

2. Set the machine in place and, using the leg adjusters, level from side-to-side and front-to-back to prevent door leaks.

Steam generated from normal operation may escape from door. Wood, laminates, veneers, etc. are unsuitable materials for use in areas exposed to dishwasher steam and detergents. Stainless steel or other moisture-resistant shields are recommended for surfaces adjacent to sides and tops of under counter dishwashers.

2.2.1. Electrical*

Prior to installation make sure the electrical supply is compatible with the specifications on the machines data plate.

115 volt, 60 Hz dedicated circuit must be used to supply electrical power to the L-1X or L-1X16 Dishmachine (see specification sheet page 1).

DO NOT USE POWER CORD
OR GFI OUTLET

This unit **MUST BE** hard-wired to a
dedicated appropriately size circuit breaker.

WARNING: Electrical and grounding connections must comply with the applicable portions of the National Electrical Code and/or other local electrical codes.

***Note*:** For supply connections, use copper wire only rated at 90 degree C minimum.

---

* **Electrical and plumbing connections must be made by a qualified person who will comply with all available Federal, State, and Local Health, Electrical, Plumbing and Safety codes**

2.2.2. Plumbing*

Notice to Plumber: The plumber connecting this machine is responsible for making certain that the water lines are THOROUGHLY FLUSHED OUT BEFORE connecting to the dishwasher.

The machine is equipped with a gate valve with a ½" female NPT connection located at the lower left-hand corner (facing the back) of the machine. A 140°F water line should be plumbed to this point. The water line used must be of sufficient length and flexibility to permit the machine to be moved for cleaning.

A 1" male NPT fitting is provided for the drain connection on the discharge port of the diverter valve (lower, right-hand corner of machine). This fitting may be removed and user provided hardware might be used if necessary to facilitate compliance with local plumbing codes. Code requires that the drain discharge provide an air gap no less than 1" or two pipe diameters; whichever is greater, above the flood level rim of an approved floor drain.

CMA recommends utilizing a water softening system to maintain water hardness measurements of 3.5 gpg (grains per gallon) or less. This will assure maximum results and optimum operation of the dishmachine.

Note: high iron levels in the water supply can cause staining and may require an iron filter. High chlorine levels in the water supply can cause pitting and may require a chloride removal system.

If an inspection of the dishwasher or booster heater reveals lime buildup after the equipment has been in service, water treatment is recommended. If water softener is already in place, ensure there is a sufficient level of salt.*

2.2.3. Installers Checklist

- ❒ **Glasswasher checked for concealed damage**
- ❒ **Hot water supply is recommended 140° F (60 C)**
- ❒ **Incoming water supply line is ½" minimum**
- ❒ **Supply circuit breaker for machine is properly sized (20 amp)**
- ❒ **Service voltage and phase type are correct to machine data plate**
- ❒ **Drain hose is installed with adequate air gap**
- ❒ **Glasswasher is properly grounded**
- ❒ **Glasswasher is properly leveled**
- ❒ **Machine circuit breaker is labeled "GLASSWASHER"**
- ❒ **Machine has been connected with correctly sized wire (To handle 20 amp)**

*** Electrical and plumbing connections must be made by a qualified person who will comply with all available Federal, State, and Local Health, Electrical, Plumbing and Safety codes**

The de-liming agents used to de-scale a commercial dishwasher, are highly caustic and de-liming must be done by a qualified chemical specialist.

3. Operation

3.1. Initial Setup*

3.1.1. Check…

☑ Drain screen is in place

☑ Spay arms and end plugs are secure

3.1.2. Chemicals

- Assure there is a sufficient supply of chemicals before beginning a shift.

Note: Use only commercial-grade detergents and rinse aids recommended by your chemical professional. Do not use detergents and rinse aids formulated for residential dishwashers.
Low Temperatures chemical-sanitizing dishmachines must not exceed 6% sodium hypochlorite solution (bleach) as the sanitizing agent. Higher levels may damage stainless or components.
Follow the directions precisely that are on the litmus paper vial and test the water on the surface of the bottom of the glasses. Concentration should be 50 p.p.m. minimum to 100 p.p.m. maximum. If concentration is incorrect contact your chemical supplier.

3.1.3. Filling the Machine

- With the power ON, press and hold the Fill/Start switch in the “FILL” position until the water level in the wash tank is about 1” deep, for best results use water level indicator located at the back of the wash tank.

3.2. General

Caution: *Do not operate the dishmachine without the drain screen in place. Debris getting into the pump impeller can damage the pump.*

1. Load a rack of glass into the machine and close the door.
2. With the machine filled to the proper level, press rocker Fill/Start switch to the “START” position – the machine will automatically begin its cycle. The green running light on the switch will illuminate while an operational cycle is in process.
3. At the end of the shift, drain the machine by holding the Drain rocker switch in the “DRAIN” position until the machine is completely drained. To avoid running the pump dry, do not hold the Drain rocker switch in the “DRAIN” position any longer than necessary.
4. Remove and clean the drain screen. Remove and clean the spray arms. (See wall chart instructions).
5. Replace the drain screen and spray arms.
6. Inspect your dishmachine interior for lime deposits.

*** The chemicals and water level must be programmed by a qualified chemical specialist.**

The de-liming agents are highly caustic and de-liming must be done by qualified chemical specialist.

3.2.1. Pre-Scrapping

It is essential that the operator thoroughly understand the importance of pre-scrapping the glasses before loading them. The L-1X is equipped with a removable drain screen. The drain screen can be easily removed for cleaning between Operational Cycles of the dishmachine. Properly pre-scrapping the glasses should permit the glasswasher to operate for an entire shift before needing to remove and clean the drain screen.

3.2.2. Proper Chemical Dosage

The amount of chemical delivered, whether it is detergent, sanitizer or rinse aid, is determined by its respective cam on the cam timer.

- Cam number 2 runs the detergent pump
- Cam number 5 runs the sanitizer pump
- Cam number 6 runs the rinse aid pump

These cams were set at the factory but must be adjusted after final installation to maximize efficiency of chemical use (see section **4.1.1 Cam Adjustment**.)

3.2.1. Proper Filling

The #4 cam must be adjusted properly to automatically dispense the correct amount of water each cycle. When the #4 cam switch actuator rides down into the cam groove, the water solenoid valve will activate to fill the machine. This cam only controls the duration the water valve is activated dispensing water inside the wash tank (see section **4.1.1 Cam Adjustment**).The #4 cam is properly adjusted when the water level in the wash tank is at the “Fill Line” located on the back wall of the wash tank. If water pressure fluctuates, install a Pressure Regulator Valve (PRV) to maintain proper water levels between cycles. If water level is too low wash pump will cavitate and become noisy and lose pressure to wash arms.

Note: The tank must be properly filled, and the machine properly leveled, or the float switch, which prevents the heater from turning on if the level is too low, will not permit the heater to turn on.

3.2.2. Water Pump

The water pump takes in water from the drain sump and pumps it to the spray nozzles at a rate of 35 gallons per minute and a pressure at the nozzles of approximately 7 to 10 PSI. After being released through the spray arms and washing or rinsing the dishes, the water runs down the pan to the sump, through drain screen, and back to the pump.

A 115-volt, 1 HP motor operating at 3450 RPM, drives the pump. The impeller is mounted with a right-hand thread onto a 5/8” stainless steel shaft, which is coupled to the motor armature shaft.

3.2.3. Pump Cavitation

By listening to the normal pumping sound of the motor it can be determined if there is insufficient water in the machine, as you will hear a hesitation in the normal pumping rhythm, which is created by the air getting into the pump. Cam 4 can be adjusted to increase the amount of water that is automatically fed into the machine during a cycle (see section **4.1.1 Cam Adjustment**).

3.2.4. Deliming Dishmachine*

Here are some recommendations for deliming dishmachine:

- If your dishmachine uses chemical sanitizers like chlorine, iodine, consult your chemical professional to verify chemicals used for deliming. **Mixing chemicals can create a noxious gas or acid which could be harmful to humans or damage your machine.**
- You have to manually drain the tank and fill with fresh water before adding the deliming agent.
- After filling the machine with fresh water, add the correct amount of deliming solution as recommended by the chemical manufacturer. Close the door.
- Toggle delime switch to “Delime” position and run the machine until the interior lime build up has been dissolved.
- After the cycle, inspect the inside of the machine.
- If it is not delimed, cycle again, following the deliming solution’s instructions.
- If the machine is delimed, flip delime switch to “Normal” position and drain and refill the machine.
- Run for several minutes to remove residual deliming solution.
- Drain and refill the machine.

*** The chemicals and water level must be programmed by a qualified chemical specialist.**

The de-liming agents are highly caustic and de-liming must be done by qualified chemical specialist.

4. Maintenance

The maintenance procedures detailed in this section are to be performed by qualified personnel.

4.1. Timer assembly

The standard timer assembly consists of a ½ RPM (2 minutes per revolution) motor turning a common shaft, which, in turn, rotates eight cams. As the cams rotate, they control various functions and the sequence of the operational cycle.

The individual function of each of the 8 cams is identified by a label on the timer assembly. Cams 1 through 8 are positioned from left to right beginning with the “START” cam (cam 1).

START	DET.	DRAIN	FLUSH	SANI.	RINSE	MOTOR PAUSE	HEATER *

Timer Assembly Label

*****The “HEATER” label is not present if the optional sustainer heater is not installed on the machine.

Except for cams 1, and 3, all other cams can be user adjusted. The cam positions are all set at the factory and only the cams controlling the chemical pumps (cams 2, 5 & 6) should ever need adjusting. Each micro switch on the timer assembly is turned on and off by the cam its actuator rides on. For all of the cams, except cams 1, 7 and 8, its corresponding switch is ON when its actuator is down in the cam groove. (Cams 1, 7 and 8 are reverse acting and are turned ON when the micro switch actuator is up out of the groove.) Opening the groove of any cam other than cams 1, 7 or 8 will increase the amount of time that the micro switch is held ON. The cams are slip-fit and a cam adjustment wrench is provided (a small screw driver or the edge of a table knife can also work to adjust the cams).

4.1.1. Cam Adjustment

The two sides of each cam connect to the shaft with a slip-fit so all cam adjustments are made by rotating one side of the cam on the shaft to either increase or decrease the size of the cam groove.

1. Turn off the circuit breaker providing power to the machine before pulling the control drawer out to access the timer assembly.

   Caution: *One of the terminals on the main power switch remains “hot” even when the machine’s main power switch is turned off—so turn the power off at the circuit breaker.*
2. Remove the two 8–32 x ½” Screws securing the control drawer and slide it out to its fully extended position.
3. Using the timer assembly label, determine which cam is to be adjusted. Double check by counting over from cam 1 to the cam to be adjusted.
4. Determine which edge of the cam groove to be adjusted is the leading edge (contacts the limit switch actuator first when the shaft is rotating) and which edge of the groove is the trailing edge. The leading edge of the cam groove determines when in the cycle the control action begins and should not be changed.
5. Adjust the trailing edge of the cam groove by rotating the appropriate side of the cam in the proper direction to either increase or decrease the cam’s groove; resulting in increasing or decreasing the total time that switch will be held ON.

4.2. Quick service guide

MODELS: L-1X, L-1X16 UNDER COUNTER

TECHNICAL ISSUE	CAUSE	SOLUTION
Wash Pump motor will not shut off	Delimer switch in delime position	Flip to *NORMAL* position
	Faulty delimer switch	Replace switch
	Faulty manual drain switch	Replace switch
	Faulty contactor	Replace contactor
Continues cycles	Faulty #1 micro switch (start/stop)	Replace switch
	Faulty start/fill switch	Replace switch
Sustainer heater not working	Faulty #1 micro switch	Replace switch
	Low water level inside machine	Add water to tank to activate float switch, adjust water cam on timer
	Faulty float switch	Replace switch
	Machine not level	Level machine
	Faulty ice cube relay	Replace relay
Machine does not drain	Faulty #3 micro switch (drain)	Replace switch
	Faulty drain valve	Replace drain valve
Does not hold water	Faulty #3 micro switch (drain)	Replace switch
	Clogged or defective drain valve	Clean and/ or replace drain valve
Tank overflows overnight	Debris in water Solenoid Valve	Clean and replace valve diaphragm
Water leaks out of Vacuum Breaker	Dirty or defective vacuum breaker kit assy	Clean or replace internal parts
	Faulty check valve	Replace check valve
Wash Pump motor not running	Male/ female plug on the back of control drawer is loose	Secure plug
	Faulty door reed switch	Replace reed switch
	Faulty 7th micro switch	Replace switch
	Faulty motor contactor	Replace contactor
Timer does not rotate	Faulty Start/Fill Switch	Replace switch
	Faulty #1 micro switch	Replace switch
	Faulty timer motor	Replace motor assembly
Machine does not fill	Faulty #4 Micro switch	Replace switch
	Debris inside water solenoid valve or Faulty valve	Clean and replace valve diaphragm
	Faulty water solenoid coil	Replace solenoid coil
Sanitizer pump does not run	Delimer switch in wrong position	Switch to *NORMAL* position
	Faulty 5th micro switch	Replace switch
	Faulty sanitizer pump motor	Replace motor

4.3. Troubleshooting

PROBLEM	LIKELY CAUSE	SOLUTION
Machine inoperative	Power off at circuit breaker	Reset circuit breaker
	Defective power switch	Replace power switch **P/N:**
	Defective timer assembly motor	Replace timer assembly motor
Pump Motor inoperative	Door is open	Close door
	Control drawer is pulled out	Secure control drawer
	Defective reed (door) switch	Replace reed (door) switch
	Defective timer assembly (Cam 7)	Replace timer assembly*
	Defective pump motor contactor	Replace contactor
	Defective pump motor	Replace pump motor
Pump Motor runs with door open	Defective reed (door) switch	Replace reed (door) switch
	Defective pump motor contactor	Replace contactor
	Delimer switch is on	Turn off delimer switch
Motor runs continuously	Delimer switch is on	Turn off delimer switch
Optional Sustainer Heater (no heat)	Defective thermostat on heater	Replace heater
	Defective heater relay	Replace heater relay
	Defective timer assembly (Cam 8)	Replace timer assembly *
	Defective heater	Replace heater
	Defective float switch	Replace float switch
	Float switch not actuated	Fill wash tank completely
		Level machine
Optional Sustainer Heater (never turns off)	Defective thermostat on heater	Replace heater
	Defective timer assembly (Cam 8)	Replace timer assembly *
	Defective heater relay	Replace heater relay

*The timer assembly motor or micro switches can be replaced independently if that is the only component that has failed.

Low heat during operation	Low incoming water temperature (below 140° F)	Turn up supply water heater
		Insulate supply water pipe
	Thermostat out of adjustment	Adjust thermostat
	(Optional) sustainer heater not installed	Install (optional) sustainer heater
	Defective sustainer heater	Replace heater
Low spray arm water flow	Limed up spray arm nozzles	De-lime spray arm nozzles
With power on, activating start switch does not begin	Defective fill/start switch (cycle light will not light either)	Replace fill/start switch

PROBLEM	LIKELY CAUSE	SOLUTION
cycle	Defective timer assembly (Cam 1)	Replace timer assembly*
Start switch requires more than 1-second activation to run cycle	Defective (Instant Start) ice cube relay	Replace ice cube relay
Activating fill switch does not fill machine	Defective fill/start switch	Replace fill/start switch
	Defective water solenoid valve	Replace water solenoid valve
Fill water won't shut off	Defective water solenoid valve	Replace water solenoid valve
	Defective fill/start switch	Replace fill/start switch
	Defective timer assembly (Cam 4)	Replace timer assembly*
Activating drain switch does not drain machine	Drain hose is kinked	Un-kink drain hose
	Defective drain switch	Replace drain switch
	Defective drain valve motor (Pump will still run)	Replace drain valve motor
Detergent pump does not run	Defective detergent pump motor	Replace pump motor
	Defective timer assembly (Cam 2)	Replace timer assembly*
Sani pump does not run	Defective sani pump motor	Replace pump motor
	Defective timer assembly (Cam 5)	Replace timer assembly*

*The timer assembly motor) or micro switches can be replaced independently if that is the only component that has failed.

Rinse pump does not run	Defective rinse pump motor	Replace pump motor
	Defective timer assembly (Cam 6)	Replace timer assembly*
Activating detergent primer switch does not run pump	Defective sani/detergent primer switch	Replace primer switch
	Defective detergent pump motor	Replace pump motor
Activating sani primer switch does not run pump	Defective sani/detergent primer switch	Replace primer switch
	Defective sani pump motor	Replace pump motor
Activating rinse primer switch does not run pump	Defective rinse primer switch	Replace primer switch
	Defective rinse pump motor	Replace pump motor
Counter does not increment	Defective counter	Replace counter
	Defective timer assembly (Cam 3)	Replace timer assembly*

PROBLEM	LIKELY CAUSE	SOLUTION
Wash tank temperature gauge displays wrong temperature	Defective temperature gauge	Replace temperature gauge
Delime switch does not activate pump motor	Defective delime switch	Replace delime switch
	Defective pump motor	Replace pump motor

*The timer assembly motor or micro switches can be replaced independently if that is the only component that has failed.

5.Addendum for Machines Installed in the City of Chicago

"All food dispensing establishments using chlorine or other approved chemical sanitizers shall, at all times, maintain an adequate testing device."

"Dishes and other eating and drinking utensils to be washed in a dishwashing machine shall be properly scraped and pre-rinsed and shall be stacked in racks or trays so as to avoid overcrowding, and so as to permit the wash and rinse waters to reach all surfaces of each utensil."

"In machine washing, multi-use eating and drinking utensils shall be washed in water containing a suitable detergent at a temperature of 120° F to 140° F or other method approved by the Department of Health."

"The water in the wash tank shall be changed during operation as often as is necessary to keep it reasonably clean. An effective concentration of detergent in the wash water shall be maintained at all times."

"Bactericidal treatment shall consist of exposure of all surfaces of dishes and utensils being washed to a rinse of clean water, at a temperature of not less than 180° F or other method approved by the Department of Health."

"All dishwashing machines shall maintain a flow pressure not less than 15 or more than 25 pounds per square inch on the fresh water line at the machine and not less than 10 pounds per square inch at the rinse nozzles. A suitable gauge cock shall be provided immediately upstream from the final rinse sprays to permit checking the flow of the final rinse water. An easily readable thermometer accurate to a ±2° F. shall be provided on both the wash and rinse water lines of the dishwashing machine which will indicate the temperature of the water solution there in."

"Dishwashing machines shall be thoroughly cleaned at least once each day. The pumps and the wash and rinse sprays or jets shall be so designed that a forceful stream of water will reach all surfaces of the utensils when they are properly racked. These parts shall be thoroughly cleaned at least once each day. The pumps and the wash and rinse sprays or jets shall be designed that a forceful stream of water will reach all surfaces of the utensils when they are properly racked. These pars shall be readily accessible for inspection and cleaning.

"After bactericidal treatment, utensils and containers shall be stored at a sufficient height above the floor in a clean, dry place, protected from flies, splash, dust, overhead leakage and condensation, and other contamination. Containers and utensils shall be inverted, covered, or otherwise protected from contamination until used for serving."

Drain racks, trays and shelves shall be made of non-corrodible material and shall be kept clean. In handling containers and utensils the surfaces thereof which come in contact with food or drink shall not be touched by the hands, except during the process of washing. Tables for clean and dirty dishes and food shall be so arranged that the dirty dishes will be as far removed from the food and clean dishes as may be possible.

All single service articles and utensils shall be purchased in sanitary cartons and stored in a clean, dry place until used, and after removal from the cartons, these articles shall be handled in such a manner as to prevent contamination.

Please note the following procedures must be followed for City of Chicago Approval:

1. **All low energy models must have low level sani-alarms, both visual and audio.**
2. **All models must have a City of Chicago approval data label affixed to the machine.**
3. **Chlorine sanitizer must be a minimum of 100 PPM.**

Appendix A: Operator & Cleaning Instructions

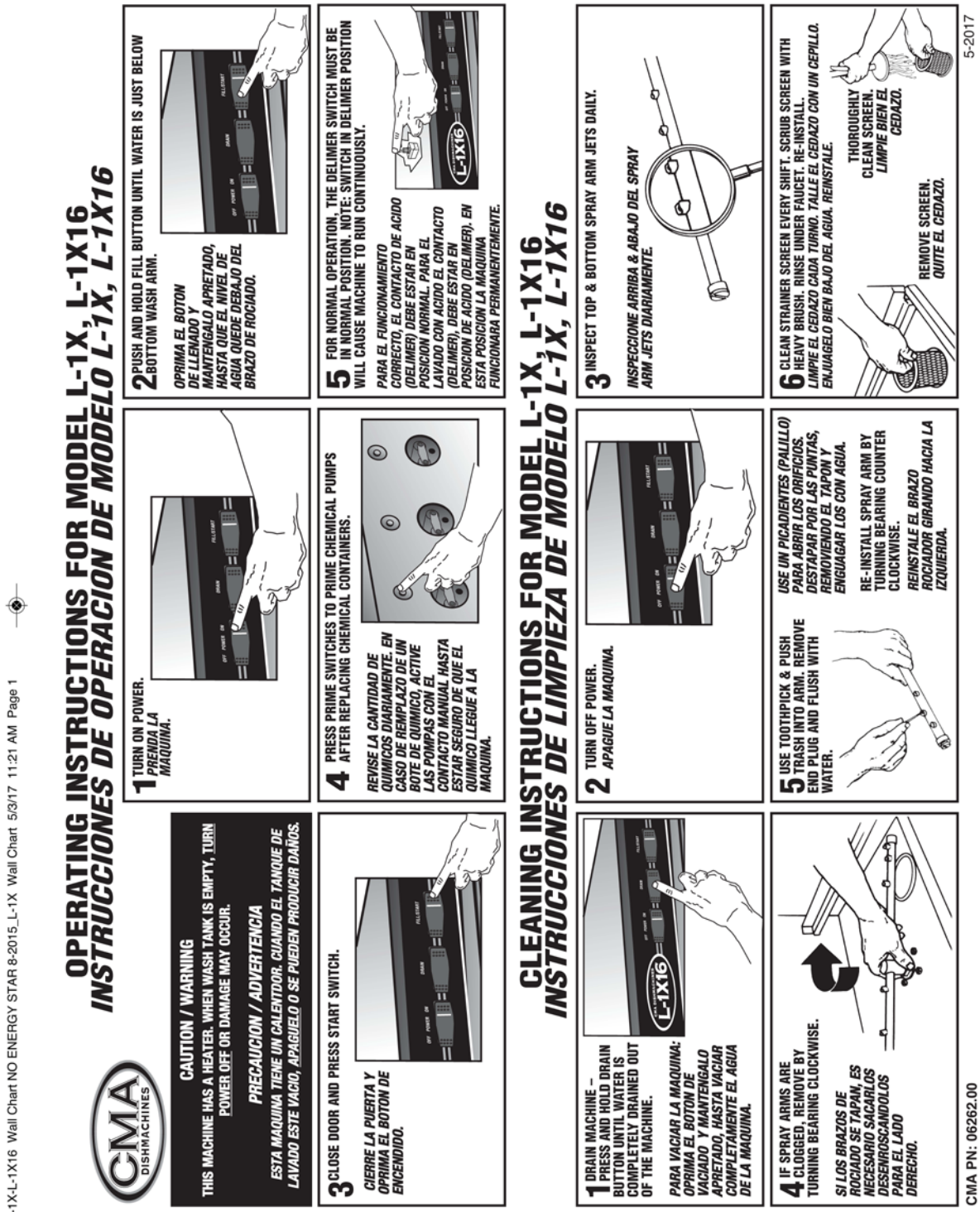
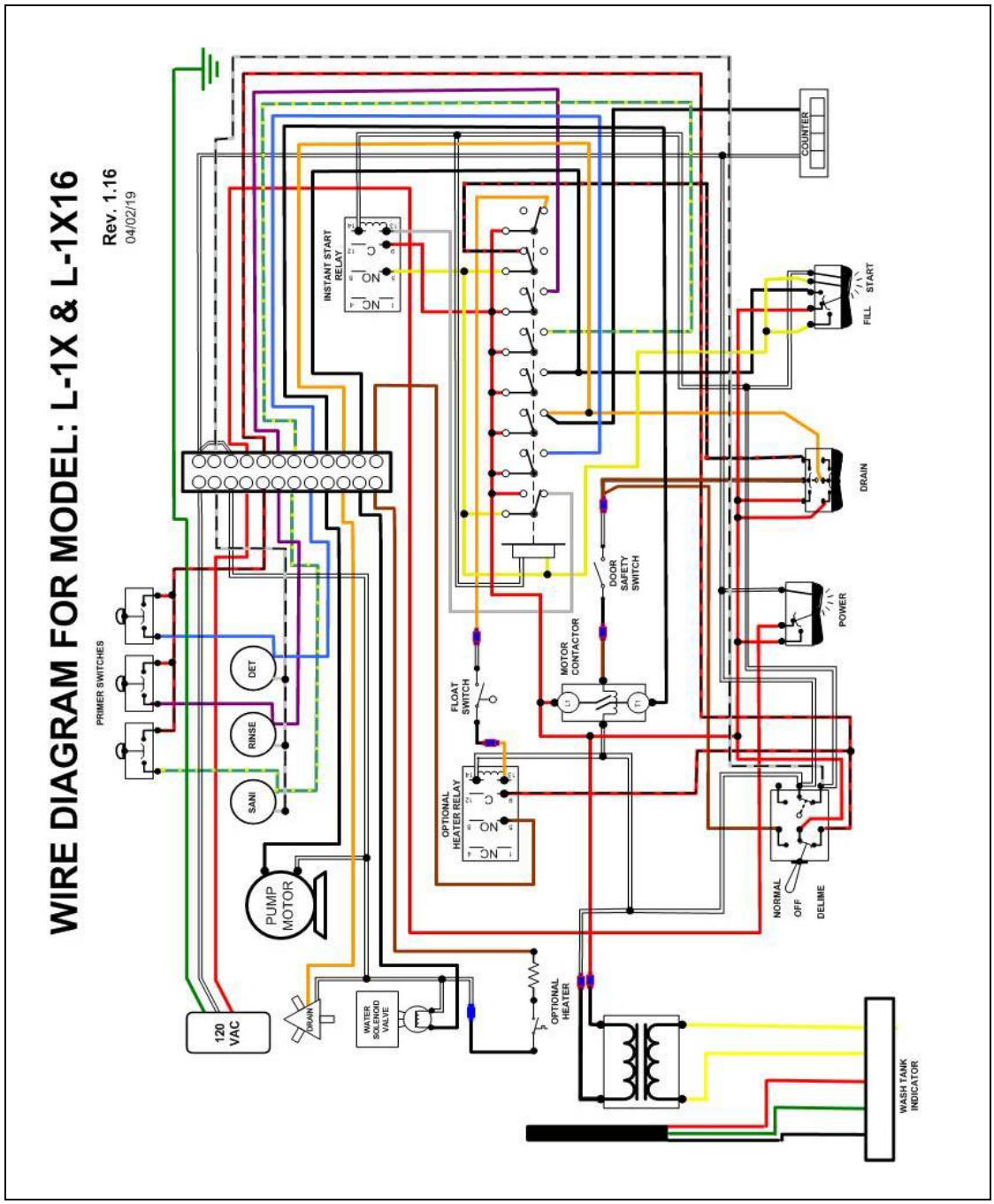
6. Electrical Diagram