Howard-McCray

Installation and Operating Instructions For

Closed Service Refrigerators

Important Instructions

Please Read carefully Before attempting to install or service case

Keep this Book for Future Reference

Howard-McCray A Division of HMC Enterprises, LLC.
831 East Cayuga Street • Philadelphia,PA 19124 USA • (215) 464-6800 • (800) 344-8222
Fax (215)-969-4890 • E-Mail: TSC@howardmccray.com

READ THIS PAGE FIRST

1. **Howard-McCray would like to thank you for purchasing one of our units.**
   PLEASE READ THIS MANUAL CAREFULLY BEFORE PROCEEDING WITH THE INSTALLATION OR OPERATING OF THIS UNIT.

2. **Store Environment - These display cabinets are made to operate at 75°F and 55% relative humidity. Temperature and/or humidity greater than the factory recommendations will hinder the performance of this cabinet.**

3. **Cabinet Set-Up – A qualified refrigeration mechanic should set-up this cabinet. The Electronic Digital Controller is set to maintain proper cabinet temperature and defrost require once a day. These settings may required minor adjustment to meet customer temperature requirements and are solely the responsibility of the customer. Adjustments are not covered by factory warranties. Failure to have this unit installed by a qualified refrigeration mechanic may VOID all the warranties on this cabinet.**

4. **Proper Loading – Only cooled foods should be placed in the cabinet.**

5. **When loading cabinet with Ice NEVER place ICE against front glass or walls of cabinet. Ice must remain within Ice Pan.**

6. **Location – Because of the large glass area, closed service cases must not be located in the direct rays of the direct rays of the sun or near radiant heat sources.**

7. **Never spray water into the cabinet. This will cause damage to the seals and the evaporative drain pan to overflow.**

8. **If additional assistance is required, please call us at 1-800-344-8222.**

READ THIS PAGE FIRST

Howard-McCray A Division of HMC Enterprises, LLC.
831 East Cayuga Street • Philadelphia,PA 19124 USA • (215) 464-6800 • (800) 344-8222
Fax (215)-969-4890 • E-Mail: TSC@howardmccray.com

Table of Contents

Receiving and Inspection 5
General Design 5
Installation and Location 5
Electrical Service Connection 5
Waste Outlet 5
Refrigeration Lines-Remote Models 6
Thermostatic Expansion Valve 6
Electronic Digital Controller 6
Temperature Controller 6
Defrost Controller 6
Final Checklist 6
Loading Procedure 6
Condensing Units 7
Thermoplastic Cutting Boards 7
Maintenance Suggestions 7
The Cleaning Process 8
Cleaning the Machine Compartment 8
Trouble Chart 8
BTU Ratings 10
Serial Rating Plate Data ..... 11 - 12
Parts List ..... 13 - 14
Customer Installation Record 15
Warranty ..... 16 - 21
Electronic Digital Controller - Factory Settings 22
32E Plan Views 23
34E Plan Views 24
34N Plan Views 25
35 Plan Views 26
40E Plan Views 27
32E Joint Instruction 28
34E Joint Instruction w/Divider 29
34E Joint Instruction - Outer 30
34E Joint Instruction - Inner 31
40E End Installation Instruction 32
40E Joint Instruction - Plexiglas 33
40E Joint Instruction 34
Wiring Diagrams – 4ft & 6FT Remote 35
Wiring Diagrams – 8ft & 10ft & 12ft Remote 36

Howard-McCray A Division of HMC Enterprises, LLC.
831 East Cayuga Street • Philadelphia,PA 19124 USA • (215) 464-6800 • (800) 344-8222
Fax (215)-969-4890 • E-Mail: TSC@howardmccray.com

Table of Contents (Con't)

Wiring Diagrams – 4ft Self-Contained..... 37
Wiring Diagrams – 6ft Self-Contained..... 38
Wiring Diagrams – 8ft & 10ft & 12ft Self-Contained..... 39
Display Case Leg Installation 40
Louver Instructions 41
34N & 35 LED Lamp Driver Access..... 42
32E LED Lamp Driver Access..... 43
34E LED Lamp driver Access..... 44
40E LED Lamp Driver Access..... 45
Skid Closed Off Mtg Instructions 46

INSTALLATION AND OPERATING INSTRUCTIONS FOR McCray GRAVITY COIL CLOSED SERVICE CASES

The following instructions are for the benefit of the new owner and the installing contractor. They should be studied carefully before attempting to install or service the cabinet. This manual is the property of the owner and should remain in his possession.

RECEIVING AND INSPECTION PROCEDURE:

1) All cabinets have been carefully operation tested and inspected before crating and are determined to be in good operating condition before leaving our factory.

2) Upon arrival of the cabinet, the crate should be examined thoroughly for any damage that may have occurred in transit. In the event that damage is discovered, it should be noted on the delivery ticket or Bill of Lading and signed to that effect. An immediate claim should then be filed against the carrier giving the description and amount of damage.

3) After the crate has been removed, the cabinet should be examined carefully for any damage. If there is any concealed damage, the carrier should be notified at once. Make request in writing to carrier for inspection within 15 days, and retain all packaging. The carrier will supply inspection report and required claim forms.

4) Our Company can assume no responsibility for filing freight claims as the cabinet was in good condition on a clear Bill of Lading, F.O.B. Philadelphia. However, the factory will assist, if required.

5) Shortages-Check your shipment for any shortages possible of material. If one exists and is found to be responsibility of Howard-McCray. If a shortage exists and it involves the carrier, notify the carrier immediately and request an inspection. Howard McCray will acknowledge shortages within ten days from receipt of acknowledgement.

GENERAL DESIGN

These cabinets are designed for the display of Delicatessen, Fish, Meat and Poultry products. It is very important that the recommended control Settings for refrigeration be followed, see page three. On Remote models it is also significant that the condensing unit be matched as closely as possible to the requirements listed in this manual. Oversizing the condensing unit will result in lower than necessary suction pressures causing very low evaporator temperatures and dehydration of the product. High humidity and close product temperature control is extremely important in this type of cabinet.

INSTALLATION AND LOCATION

Because of the large glass area, closed service cases must not be located in the direct rays of the sun or near any radiant heat sources. It is of vital importance that all cabinets be leveled, from front to back as well as from end to end. This will assure proper operation of the evaporator, proper alignment from case to case and adequate drainage of defrost water.

ELECTRICAL SERVICE CONNECTION

The electrical connections are to be made in junction boxes located at the rear or front of the cabinet. There is one box for the condensing unit & lights and another box for the general purpose receptacle. The incoming voltage must be maintained to within 5% of the voltage shown on the name plate. Howard McCray will not accept responsibility for the performance of the cabinet or malfunction of any component due to a lower voltage supply than that indicated on the serial rating plate. Use separate electrical supply lines connected to a fuse block or circuit breaker of proper capacity.

WASTE OUTLET

On models 34E, 34N and 35 there is a 1 inch PVC connection at the center rear of the cabinet. The drain connection must be trapped and conform to local plumbing regulations. Common practice is to maintain at least 1/4 inch drop per foot of run.

On models 32E and 40E there is a 1 inch PVC connection at the center underside of the cabinet. The drain connection must be trapped and conform to local plumbing regulations. Common practice is to maintain at least 1/4 inch drop per foot of run.

REFRIGERATION LINES - REMOTE MODELS

Tubing for field connections are located at the cabinet left hand end, viewing from front of cabinet.

THERMOSTATIC EXPANSION VALVE

On models 32E and 40E, the expansion valve is located at the left hand end of the top evaporator coil. On models 34E 34N and 35, it is connected to the left end of the top evaporator but is located at the left end of the bottom evaporator. The valve is adjusted so that the coil is fully flooded, this will result in a superheat setting of approximately 4°F.

ELECTRONIC DIGITAL CONTROLLER TEMPERATURE & DEFROST

This cooler employs a Electronic Controller which controls the cabinets temperature and defrost period.

Temperature Controller

The control is programed to cycle based on cabinet air temperature between 40F to 36F at the Drain baffle assembly. The sensor for the control is located in the rear of the cabinet on the left side attached to the drain baffle. The controller is located in the machine compartment next to electrical junction boxes. The display on the controller is indicating the temperature at the drain baffle sensor.

Warning

This control has been calibrated and set at the factory to maintain the proper temperature. Before attempting to change this setting, the cabinet should be put into operation for a minimum of 16 hours.

If needed to change the setting of the controller follow these steps:

1. Push the **[SET]** key on the controller for more than 2 seconds to change Set point value.
2. The value of the set point will be displayed and the **^{o}F** LED starts blinking.
3. To change the set value push the **[UP]** or **[DOWN]** arrow to raise or lower set point.
4. To confirm the new set point value push the **[SET]**.

Once the control has been reset, allow the cabinet to run for 4 hours to stabilize.

Defrost Controller

The cabinet goes into defrost every 12 hours. From the intial start up. If you want to set the defrost period to start during closing hours simply push the **[MELTING SNOW FLAKE]** key for more than 2 seconds and a manual defrost will start. Now the next defrost will be 12 hours from that point. Defrost will terminate based on the the top evaporator coil temperature. The sensor to terminate defrost period is located in the evaporator coil on the left side, rear of the cabinet. When the coil temperature reaches 40F the defrost period will terminate. Remember the Defrost Termination Temperature setting must be high enough to allow the coil to completely clear itself of frost and ice during the off cycle.

FINAL CHECKLIST

1. Check setting of defrost timer.
2. Check operating pressures.
3. Check electrical requirements of unit to supply voltage.
4. Set pressure control for desired temperature range.
5. Check system for proper defrost operation.
6. Check condensing unit for vibrating or rubbing tubing.
7. Check packing nuts on all service valves.
8. Replace all service valve caps and latch unit covers.
9. Tighten all screws in grill area.

LOADING PROCEDURE

Do not place products into the case until 6 hours after it is started. As quickly as possible, stock cases exposing only small quantities to store temperatures for short periods of time. So older stock does not accumulate, it is important to keep stock rotated properly. A first-in, first-out rotation practice will keep the products in good stable condition. Avoid loading case so that the product sticks out beyond shelves. This will interfere with the airflow of the case and will result in diminished performance. When applicable keep the service doors closed. Refrigeration performance will be seriously affected if left open.

ENERGY EFFICIENT CONDENSATE EVAPORATING CONDENSING UNITS.

Condensation occurs naturally when water vapor in the air contacts a cold surface. The sweat on the outside of a glass of ice is a familiar example of natural condensation.
Likewise, when air, all air contains some water vapor, contacts the tubes and aluminum fins of the cooling coil in the refrigerator, water is deposited.

Because the cooling coil is very cold, about 20°f, this water turns to ice or frost. If this ice and frost was permitted to continue building up on the coil, it would eventually block the air passages between the fins and it would loose its cooling ability. Therefore, it is necessary to defrost or melt the ice and frost from the coil periodically. This is done automatically by controls that turn the refrigeration machine off and permit the coil to warm up above melting point. The water from the melted ice and frost then is funneled through a tube to the base of the refrigeration machine or condensing unit. In the past, this water then was dissipated back into the air by directing it into a pan that has electric resistance elements imbedded into its base. When the pan gets very hot, it boils the water and dissipates it into the atmosphere. The Howard-McCray Case has a much more energy efficient method of removing this water. The base of the condensing unit has a very hot tube, from the compressor to the condenser that dissipates the water without any electrical connections. This system is not only fail safe but it is much more sanitary and virtually corrosion free.

On most "Howard-McCray" Self-Contained Display Cases, the drain pan is directly under the condensing unit. Be sure that the drain hose empties into this pan.

CONDENSING UNIT-SIDE VIEW

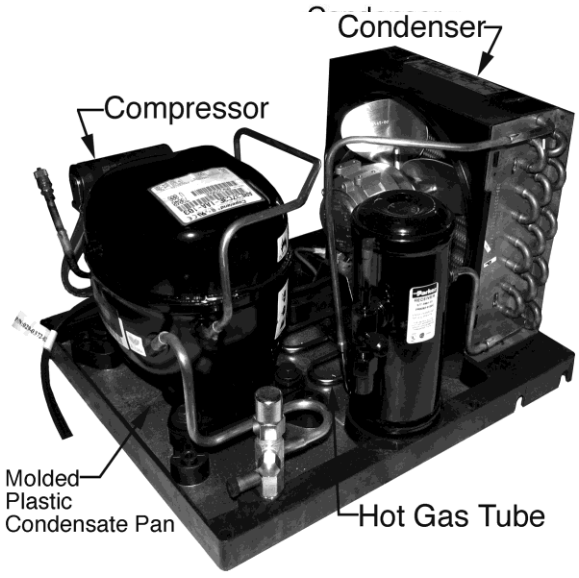

Warning

The condensate disposal system of this case is designed to dispose of the water from the evaporators only. When cases are used with ice or when additional water is injected into the case. Other arrangements must be made to dispose of this water.

Recommended Cleaning Procedure for Zip-Lite Thermoplastic Cutting Boards

Where high pressure cleaning equipment is not available, use hot water, cleanser or any other granular detergent, and a stiff bristle brush. The abrasive cleaning section is very important. Merely wiping the board with a damp cloth will not do a sufficient cleaning job. Scrub the board thoroughly and rinse with hot water. Allow to lie flat - do not stand on end. This should be done daily.

There are several germicidal cleaners available which also do an excellent job. Among them are Calgon's Big Cat and Johnson's Break up. Clorox is another good cleaner and is USDA approved.

Periodically, after the board has been thoroughly cleaned, go over the board with a clean, flat stainless steel scraper. This helps to seal some of the knife marks, which may accumulate over a period of time.

We do not recommend the use of cleavers on any synthetic cutting board.

MAINTENANCE SUGGESTIONS

An attractive delicatessen operation can be a very profitable department in most supermarkets. Dirty or poorly merchandised cabinets are offensive to most discriminating customers, so a clean attractive cabinet will pay dividends. Weekly or more often, if necessary, the display area should be cleaned and attractively stocked.

IMPORTANT NOTICE

1) NEVER under any circumstances should a water hose be placed into this cabinet.

2) ALWAYS disconnect the power to the cabinet before attempting to clean it with any liquid.

3) NEVER use ammonia or solutions whit ammonia on this cabinet.

4) The use of abrasive cleaning materials on this cabinet will void all cabinet warranties.

5) NEVER under any circumstance place Ice, Meats or Poultry Products against the front display glass, this will VOID the manufacturer's warranty

Howard-McCray A Division of HMC Enterprises, LLC.
831 East Cayuga Street • Philadelphia,PA 19124 USA • (215) 464-6800 • (800) 344-8222
Fax (215)-969-4890 • E-Mail: TSC@howardmccray.com

THE CLEANING PROCESS

1. Turn the power off from the source.
2. Remove al merchandise from the cabinet and store in a cooler. Then remove all shelves and pans.
3. This cabinet can be hand cleaned internally with a mild soap detergent and hot water. Diluted non-chlorine bleach and hot water is a good sanitizer. The cleaning cloth should be just wet enough to get a reasonable cleaning action but should not be wet to a point where it will emit a large amount of water which will flow through the drain system causing the Evaporator Drain Pan to overflow.
4. After the cabinet is cleaned, any reaming water in the cabinet can be soaked up with the use of a sponge and dried out with a dry cloth completely before resuming operations.
5. Make sure that the bottom drain is open and remove all scraps, paper, and lint.
6. All external panels may be cleaned with a damp cloth, and then they may be polished with a dry lint free cloth. This will preserve the luster of the cabinet.

CLEANING THE MACHINE COMPARTMENT

At intervals of four to six months or before, if necessary, it is recommended that the machine compartment be cleaned out. It should be accomplished in the following order:

1) Shut the cabinet down electrically completely.

2) The Evaporative Drain Pan should be wiped out with a cloth and the water removed with a sponge.

3) With the use of a hose/brush attachment on a vacuum cleaner, all dirt, store lint and dust can be removed from the machine compartment. The condenser face can be brushed and cleaned in a similar manner. It is of Vital Importance that the Condenser gets the proper amount of air through the fins and around the tubes.

4) If any traces of oil are found, contact your Refrigeration Service Man as soon as possible. ALWAYS EXERCISE THE UTMOST CARE, DAMAGE TO COMPONENTS DURING THE CLEANING PERIOD CAN BE COSTLY.

5) Before reloading the cabinet with merchandise, allow an hour for refrigeration pull-down. Make sure that all merchandise is in good salable and refrigerated condition when re-loading the cabinet.

Condensing Unit-Front View

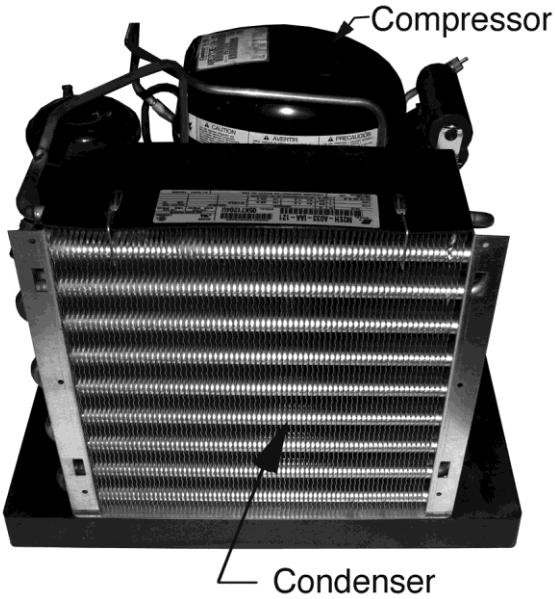

WARNING! Failure to clean condenser coil weekly will void warranty. The condensing coil is located behind front grille on the left side of the cabinet.

Howard-McCray A Division of HMC Enterprises, LLC.
831 East Cayuga Street • Philadelphia,PA 19124 USA • (215) 464-6800 • (800) 344-8222
Fax (215)-969-4890 • E-Mail: TSC@howardmccray.com

Trouble Chart

A. Compressor will not start - no hum

Possible Causes:
1. Disconnect switch open
2. Blown fuse
3. Defective wiring
4. Overload protector tripped
5. Open control contacts(control may be defective, or unit location may be too cold)
6. Defective overload protector

B. Compressor will not start - hums but cycles on overload

Possible Causes:
1. Low voltage
2. Unit wired incorrectly
3. Starting capacitor defective
4. Starting relay contact not closing
5. Compressor motor defective
6. High head pressure
7. Bearings on pistons tight - low oil charge

C. Compressor starts, but starting winding remains in circuit

Possible Causes:
1. Low voltage
2. Unit wired incorrectly
3. Starting capacitor weak
4. Running capacitor defective
5. Starting relay defective
6. Compressor motor defective
7. High head pressure

D. Compressor starts and runs but cycles on overload

Possible Causes:
1. Low voltage
2. Running capacitor defective
3. Overload protector defective
4. High head pressure
5. Fan motor, pump, etc., wired to wrong side of overload protector
6. Compressor motor partially grounded
7. Unbalanced line voltage (3 phase models)
8. Bearing or pistons tight - low oil charge

E. Compressor tries to start when thermostat closes but cuts out on overload, starts after several attempts

Possible Causes:
1. Low voltage
2. Thermostat differential too close (lower than 10°)
3. Thermostat bulb not in tight contact with evaporator

F. Compressor short cycles

Possible Causes:
1. Control differential set too close
2. Refrigerant undercharge
3. Refrigerant overcharge
4. Discharge valve leaking
5. Expansion valve leaking
6. Cutting out on high pressure control
7. Cutting out on overload protector because of tight bearings, stuck piston, high head pressure or restricted air cooled condenser

G. Running cycle too long, or unit operated continuously

Possible Causes:
1. Insufficient refrigerant charge
2. Dirty or restricted condenser
3. Unit: location too hot
4. Control contacts stuck
5. Air or other noncondensable gases in system
6. Expansion valve plugged or defective
7. Fixture doors lift open too long
8. Insufficient, defective or water - logged insulation
9. Evaporator coil plugged with ice or dirt

H. Evaporator temperature too high

Possible Causes:
1. Shortage of refrigerant, or leak on system
2. Restricted capillary tube, strainer or drier
3. Control setting too high
4. Expansion valve restricted
5. Expansion valve too small
6. Evaporator coil plugged with ice or dirt
7. Evaporator oil logged

I. Noisy Unit

Possible Causes:
1. Compressor oil charge low
2. Fan blade bent causing vibration
3. Fan motor bearings loose or worn
4. Tube rattle
5. Loose parts on condensing unit

J. Liquid line hot

Possible Causes:
1. Unit undercharged or leak in system
2. Expansion valve opened too far

K. Liquid line frosted

Possible Causes:
1. Restriction in drier
2. Shut off valve on receiver either partially closed or restricted

L. Suction line sweating or frosted

Possible Causes:
1. Expansion valve open too wide
2. Evaporator iced up
3. Evaporator fan motors not operating

90-040 CLOSED SERVICE CASE INSTALLATION MANUAL

CLOSED SERVICE REFRIGERATORS

BTU RATINGS PER HOUR AT +20°F EVAPORATOR

FOR REMOTE INSTALLATIONS

Refrigeration Data

Number of Cases					Linear ft.	CDS/CMS	CFS
4	6	8	10	12	*W/O ENDS	BTU/H	BTU/H
1					4	1400	820
	1				6	2100	1230
		1			8	2800	1640
			1		10	3500	2050
				1	12	4200	2460
	1	1			14	4900	2870
		2			16	5600	3280
		1	1		18	6300	3690
			2		20	7000	4100
			1	1	22	7700	4510
				2	24	8400	4920
		2	1		26	9100	5330
		1	2		28	9800	5740
			3		30	10500	6150
			2	1	32	11200	6560
			1	2	34	11900	6970
				3	36	12600	7380
		2	1	1	38	13300	7790
			4		40	14000	8200
			3	1	42	14700	8610
			2	2	44	15400	9020
			1	3	46	16100	9430
				4	48	16800	9840
			5		50	17500	10250
			4	1	52	18200	10660
			3	2	54	18900	11070
			2	3	56	19600	11480
			1	4	58	20300	11890
				5	60	21000	12300
			5	1	62	21700	12710
			4	2	64	22400	13120

*** Add 2 1/2" for each end in Lineup.**

Design loads are based on air-conditioned stores not exceeding 75°F and a relative humidity below 55%. Condensing units operating in a 90°F ambient or lower.

The data contained herein has been derived from extensive tests and is offered ONLY as a guide in the selection of condensing units. Since the installation of remote units cannot be controlled by the manufacturer, Howard-McCray. will assume no liability for results obtained through the use of the information presented.

Howard-McCray A Division of HMC Enterprises, LLC.
831 East Cayuga Street • Philadelphia,PA 19124 USA • (215) 464-6800 • (800) 344-8222
Fax (215)-969-4890 • E-Mail: TSC@howardmccray.com

90-040 CLOSED SERVICE CASE INSTALLATION MANUAL

Serial and Rating Plate Data

MODEL NO.	CASE DIMENSIONS D x H x L	ELECTRICAL VOLTAGE	COMP H.P.	MAX. AMPS
SC-CDS32E-4	30 1/2 x 50 5/8 x50	115V-60Hz-1ph	1/4	6.0/12.0*
SC-CFS32E-4	30 1/2 x 50 5/8 x50	115V-60Hz-1ph	1/4	6.0/12.0*
SC-CMS32E-4	30 1/2 x 50 5/8 x50	115V-60Hz-1ph	1/4	6.0/12.0*
SC-CDS32E-6	30 1/2 x 50 5/8 x74	115V-60Hz-1ph	1/3	9.1/16.0+
SC-CFS32E-6	30 1/2 x 50 5/8 x74	115V-60Hz-1ph	1/4	6.8/12.0*
SC-CMS32E-6	30 1/2 x 50 5/8 x74	115V-60Hz-1ph	1/3	9.1/16.0+
SC-CDS32E-8	30 1/2 x 50 5/8 x98	115V-60Hz-1ph	1/2	11.2/16.0+
SC-CFS32E-8	30 1/2 x 50 5/8 x98	115V-60Hz-1ph	1/3	9.1/16.0+
SC-CMS32E-8	30 1/2 x 50 5/8 x98	115V-60Hz-1ph	1/2	11.2/16.0+
SC-CDS34E-4	34 x 53 x 52 1/2	115V-60Hz-1ph	1/4	6.0/12.0*
SC-CFS34E-4	34 x 53 x 52 1/2	115V-60Hz-1ph	1/4	6.0/12.0*
SC-CMS34E-4	34 x 53 x 52 1/2	115V-60Hz-1ph	1/4	6.0/12.0*
SC-CDS34E-6	34 x 53 x 76 1/2	115V-60Hz-1ph	1/3	8.7/16.0+
SC-CFS34E-6	34 x 53 x 76 1/2	115V-60Hz-1ph	1/4	6.4/12.0*
SC-CMS34E-6	34 x 53 x 76 1/2	115V-60Hz-1ph	1/3	8.7/16.0+
SC-CDS34E-8	34 x 53 x 100 1/2	115V-60Hz-1ph	1/2	11.2/16.0+
SC-CFS34E-8	34 x 53 x 100 1/2	115V-60Hz-1ph	1/3	9.1/16.0+
SC-CMS34E-8	34 x 53 x 100 1/2	115V-60Hz-1ph	1/2	11.2/16.0+
SC-CDS34E-10	34 x 53 x 124 1/2	115V-60Hz-1ph	1/2	13.8
SC-CFS34E-10	34 x 53 x 124 1/2	115V-60Hz-1ph	1/3	9.9
SC-CMS34E-10	34 x 53 x 124 1/2	115V-60Hz-1ph	1/2	13.8
SC-CDS34E-12	34 x 53 x 148 1/2	115V-60Hz-1ph	3/4	17.4
SC-CFS34E-12	34 x 53 x 148 1/2	115V-60Hz-1ph	1/2	13.8
SC-CMS34E-12	34 x 53 x 148 1/2	115V-60Hz-1ph	3/4	17.4
SC-CDS34N-4	34 x 55 x 48	115V-60Hz-1ph	1/4	6.0/12.0*
SC-CFS34N-4	34 x 55 x 48	115V-60Hz-1ph	1/4	6.0/12.0*
SC-CMS34N-4	34 x 55 x 48	115V-60Hz-1ph	1/4	6.0/12.0*
SC-CDS34N-6	34 x 55 x 72	115V-60Hz-1ph	1/3	8.7/16.0+
SC-CFS34N-6	34 x 55 x 72	115V-60Hz-1ph	1/4	6.4/12.0*
SC-CMS34N-6	34 x 55 x 72	115V-60Hz-1ph	1/3	8.7/16.0+
SC-CDS34N-8	34 x 55 x 96	115V-60Hz-1ph	1/2	11.2/16.0+
SC-CFS34N-8	34 x 55 x 96	115V-60Hz-1ph	1/3	9.1/16.0+
SC-CMS34N-8	34 x 55 x 96	115V-60Hz-1ph	1/2	11.2/16.0+
SC-CDS34N-10	34 x 55 x 120	115V-60Hz-1ph	1/2	13.8
SC-CFS34N-10	34 x 55 x 120	115V-60Hz-1ph	1/3	9.9
SC-CMS34N-10	34 x 55 x 120	115V-60Hz-1ph	1/2	13.8
SC-CDS34N-12	34 x 55 x 144	115V-60Hz-1ph	3/4	17.4
SC-CFS34N-12	34 x 55 x 144	115V-60Hz-1ph	1/2	13.8
SC-CMS34N-12	34 x 55 x 144	115V-60Hz-1ph	3/4	17.4

12.0* = 15Amp NEMA Cord and Plug
16.0+ = 20Amp NEMA Cord and Plug

Howard-McCray A Division of HMC Enterprises, LLC.
831 East Cayuga Street • Philadelphia,PA 19124 USA • (215) 464-6800 • (800) 344-8222
Fax (215)-969-4890 • E-Mail: TSC@howardmccray.com

Serial and Rating Plate Data (cont)

MODEL NO.	CASE DIMENSIONS D x H x L	ELECTRICAL VOLTAGE	COMP H.P.	MAX. AMPS
SC-CDS35-4	35 1/2 x 52 x 50	115V-60Hz-1ph	1/4	6.0/12.0*
SC-CFS35-4	35 1/2 x 52 x 50	115V-60Hz-1ph	1/4	6.0/12.0*
SC-CMS35-4	35 1/2 x 52 x 50	115V-60Hz-1ph	1/4	6.0/12.0*
SC-CDS35-6	35 1/2 x 52 x 72	115V-60Hz-1ph	1/3	8.7/16.0+
SC-CFS35-6	35 1/2 x 52 x 72	115V-60Hz-1ph	1/4	6.4/12.0*
SC-CMS35-6	35 1/2 x 52 x 72	115V-60Hz-1ph	1/3	8.7/16.0+
SC-CDS35-8	35 1/2 x 52 x 96	115V-60Hz-1ph	1/2	11.2/16.0+
SC-CFS35-8	35 1/2 x 52 x 96	115V-60Hz-1ph	1/3	9.1/16.0+
SC-CMS35-8	35 1/2 x 52 x 96	115V-60Hz-1ph	1/2	11.2/16.0+
SC-CDS35-10	35 1/2 x 52 x 120	115V-60Hz-1ph	1/2	13.8
SC-CFS35-10	35 1/2 x 52 x 120	115V-60Hz-1ph	1/3	9.9
SC-CMS35-10	35 1/2 x 52 x 120	115V-60Hz-1ph	1/2	13.8
SC-CDS35-12	35 1/2 x 52 x 144	115V-60Hz-1ph	3/4	17.4
SC-CFS35-12	35 1/2 x 52 x 144	115V-60Hz-1ph	1/2	13.8
SC-CMS35-12	35 1/2 x 52 x 144	115V-60Hz-1ph	3/4	17.4
SC-CDS40E-4	40 x 53 x 48	115V-60Hz-1ph	1/4	6.0/12.0*
SC-CFS40E-4	40 x 53 x 48	115V-60Hz-1ph	1/4	6.0/12.0*
SC-CMS40E-4	40 x 53 x 48	115V-60Hz-1ph	1/4	6.0/12.0*
SC-CDS40E-6	40 x 53 x 72	115V-60Hz-1ph	1/3	8.7/16.0+
SC-CFS40E-6	40 x 53 x 72	115V-60Hz-1ph	1/4	6.4/12.0*
SC-CMS40E-6	40 x 53 x 72	115V-60Hz-1ph	1/3	8.7/16.0+
SC-CDS40E-8	40 x 53 x 96	115V-60Hz-1ph	3/4	11.2/16.0+
SC-CFS40E-8	40 x 53 x 96	115V-60Hz-1ph	1/3	9.1/16.0+
SC-CMS40E-8	40 x 53 x 96	115V-60Hz-1ph	1/2	11.2/16.0+
SC-CDS35-10	40 x 53 x 120	115V-60Hz-1ph	1/2	13.8
SC-CFS35-10	40 x 53 x 120	115V-60Hz-1ph	1/3	9.9
SC-CMS35-10	40 x 53 x 120	115V-60Hz-1ph	1/2	13.8
SC-CDS40E-12	40 x 53 x 144	115V-60Hz-1ph	3/4	17.4
SC-CFS40E-12	40 x 53 x 144	115V-60Hz-1ph	1/2	13.8
SC-CMS40E-12	40 x 53 x 144	115V-60Hz-1ph	3/4	17.4

12.0* = 15Amp NEMA Cord and Plug
16.0+ = 20Amp NEMA Cord and Plug

Howard-McCray A Division of HMC Enterprises, LLC.
831 East Cayuga Street • Philadelphia,PA 19124 USA • (215) 464-6800 • (800) 344-8222
Fax (215)-969-4890 • E-Mail: TSC@howardmccray.com

Closed Service Case Part List

Part Number	Description	4	6	8	10	12
Refrigeration	Components					
21-376-XR40CX	Electronic Temperature Control	X	X	X	X	X
51-240-ERJ02C	Expansion Valve (CFS Series)	X	X	X	X	
51-240-ERJ05C	Expansion Valve (CFS Series)					X
51-240-ERJ02C	Expansion Valve (CDS & CMS)	X	X			
51-240-ERJ05C	Expansion Valve (CDS & CMS)			X	X	
51-240-ERJ10C	Expansion Valve (CDS & CMS)					X
Light	Components					
21-030-GFCI	Receptacle/Light Switch	X	X	X	X	X
21-387-PS035	35W 24V LED DRIVER	X				
21-387-PS060	60W 24V LED DRIVER		X	X		
21-387-PS100	100W 24V LED DRIVER				X	X
21-400-34	34” ORION LED LIGHT	2		4		
21-400-40	40” ORION LED LIGHT	2		2	2	
21-400-45	45” ORION LED LIGHT			2	4	
21-400-56	56” ORION LED LIGHT		2			4
21-400-62	62” ORION LED LIGHT		2			
21-400-67	67” ORION LED LIGHT				2	4
Glass Doors	Assemblies					
14M7890DR	Outer Assy. (32E,34E,40E)	X		X		
14M7890DL	Inner Assy. (32E,34E,40E)	X		X		
16M7890DR	Outer Assy. (32E,34E,40E)		X			X
16M7890DL	Inner Assy. (32E,34E,40E)		X			X
20M7890DR	Outer Assy. (32E,34E,40E)				X	
20M7890DL	Inner Assy. (32E,34E,40E)				X	
4N7890DR	Outer Assy. (34N)	X				
4N7890DL	Inner Assy. (34N)	X				
6N7890DR	Outer Assy. (34N)		X			X
6N7890DL	Inner Assy. (34N)		X			X
8N7890DR	Outer Assy. (34N)			X		
8N7890DL	Inner Assy. (34N)			X		
10N7890DR	Outer Assy. (34N)				X	
10N7890DL	Inner Assy. (34N)				X	
4M7890DR	Outer Assy. (35)	X		X		
4M7890DL	Inner Assy. (35)	X		X		
6M7890DR	Outer Assy. (35)		X			X
6M7890DL	Inner Assy. (35)		X			X
10M7890DR	Outer Assy. (35)				X	
10M7890DL	Inner Assy. (35)				X	

Howard-McCray A Division of HMC Enterprises, LLC.
831 East Cayuga Street • Philadelphia,PA 19124 USA • (215) 464-6800 • (800) 344-8222
Fax (215)-969-4890 • E-Mail: TSC@howardmccray.com

Closed Service Case Part List (Con't)

Part Number	Description	4	6	8	10	12
Front Grille	Assemblies					
4B7766	Front Grille (32E)	X	X	X		
14M7841	Front Grille (34E)	X	X	X	X	X
4M7844	Front Grille (34N, 35, 40E)	X				
6M7844	Front Grille (34N, 35, 40E)		X	X	X	X
Rear Grille	Assemblies					
4B1090	Rear Grille (32E)	X				
6B1090	Rear Grille (32E)		X			
8B1090	Rear Grille (32E)			X		
14M7112	Rear Grille (34E)	X	X	X	X	X
4M1257	Rear Grille (34N, 35)	X				
6M1257	Rear Grille (34N, 35)		X	X	X	X

Howard-McCray A Division of HMC Enterprises, LLC.
831 East Cayuga Street • Philadelphia,PA 19124 USA • (215) 464-6800 • (800) 344-8222
Fax (215)-969-4890 • E-Mail: TSC@howardmccray.com

Keep Page for Your Records:

Dear Customer:

We wish to congratulate you on your judgment. We are very proud to have been privileged to serve you with Howard-McCray equipment to fill your requirements.

Howard-McCray equipment is the product of a company dedicated in producing products of quality, incorporating progressive features on a timely basis and backed by a warranty which provides confidence.

Should you have any questions regarding features, operation, or service, call the Howard-McCray Assistance Center toll free. (800-344-8222)

Thank you,
Howard-McCray

Customer Installation Record:

Fixture Model Number _____

Serial Number _____

Condensing Unit Model Number and Horsepower _____

Type of Control _____

Refrigerant _____

Thermostat _____

Other _____

_____

Defrost Period _____

Date of Start-UP _____

Other Remarks _____

_____

_____

Installing Contractor _____

_____

Address _____

_____

_____

_____

Phone Number _____

Howard-McCray A Division of HMC Enterprises, LLC.
831 East Cayuga Street • Philadelphia,PA 19124 USA • (215) 464-6800 • (800) 344-8222
Fax (215)-969-4890 • E-Mail: TSC@howardmccray.com

Limited Warranty Guidelines

Issued 01/01/2024

The warranty does not cover product loss or consequential damages.
TO ACTIVATE THE WARRANTY, THE FOLLOWING MUST BE COMPLETE:

1. Payment in full to Howard McCray.
2. Installed by a Qualified Refrigeration Company (1)

Warranty includes, but is not limited to, Refrigerators, Freezers and display cases sold in the Continental United States to the original Dealer and the respective customer. The warranty must be activated before any claims can be processed. This warranty cannot be transferred under any circumstances. Howard McCray products are made for commercial use only, any warranty claim for residential use will be denied and void immediately.

(1) A Qualified Refrigeration Company is defined as a fully licensed and insured refrigeration company that handles food service equipment.

Warranty for Self Contained Equipment:

Compressor - 1 Year from Date of Installation or 15 Months from Date of Shipment, whichever comes first.
Parts - 1 Year from Date of Installation or 15 Months from Date of Shipment, whichever comes first.
Labor - 90 Calendar days from Date of Installation or 120 days from Date of Shipment, whichever comes first.

Extended Warranty for Self Contained Equipment
Compressor - 4 additional years - 5 years from date of installation or 5 years 3 months from Date of Shipment - whichever comes first. Compressor age will be prorated according to **Schedule A. - COMPRESSORS**

Warranty for Remote Cases

The above Labor & Parts warranty apply to Remote units, for items that are installed by the factory (Howard McCray). Expansion valves and related components involved in the installation of these units is not covered nor any part affected by the installation. Refrigerant loss is not covered.

FAILURE TO CLEAN THE CONDENSER WEEKLY WILL VOID THE FACTORY WARRANTY

Howard-McCray A Division of HMC Enterprises, LLC.
831 East Cayuga Street • Philadelphia,PA 19124 USA • (215) 464-6800 • (800) 344-8222
Fax (215)-969-4890 • E-Mail: TSC@howardmccray.com

All Warranty Claims must include the following or they will not be processed.
The required information is as follows:

1. Service Authorization Number (SA#) – Provided by Howard McCray
2. Date of service
3. Model number of unit being serviced
4. Serial number of unit being serviced
5. Copy of wholesaler receipt for all parts replaced including compressor.

Please fill out Request for Warranty Reimbursement Form – **Schedule D**

The Recommended Service Allowances by HMC is listed on **Schedule B**

ITEMS NOT COVERED BY WARRANTY

Product Loss

Expansion Valves on Remote units

Light bulbs of any type except LED – **See Schedule C**

Adjustments of any type including thermostats, time clocks, expansion valves, hinges or controls - electronic or manual

Broken or cracked glass

Improper installation

Electrical surges which cause components to burn out

Damages due to spraying water into the unit

Claims not submitted within 60 days of date of service

Equipment that has experienced other stress or hazards such as floods, fire or other acts of nature.

One call per unit per problem

All Howard McCray equipment is intended for indoor use with ambient temperatures not exceeding 75 degrees and 55% relative humidity.

SCHEDULE A – COMPRESSOR REPLACEMENTS

FAILURE TO CLEAN THE CONDENSOR COIL ON A WEEKLY BASIS WILL VOID THE WARRANTY

First 15 months the compressor must be exchanged at the local refrigeration wholesaler.

The Factory reserves the right to supply the replacement compressor if the compressor is older than 16 months.

Months 16-36 - 100% reimbursement from factory provided the factory is provided the Compressor plate (photo will be permitted) and copy of actual invoice from the local refrigeration wholesaler.

Months 37-48 - 75% reimbursement from factory provided the factory is provided the compressor plate (photo will be permitted) and copy of actual invoice from the local refrigeration wholesaler.

Months 49-60 - 50% reimbursement from factory provided the factory is provided the compressor plate (photo will be permitted) and a copy of the actual invoice from the local refrigeration wholesaler.

FAILURE TO CLEAN THE CONDENSOR COIL ON A WEEKLY BASIS WILL VOID THE WARRANTY

Howard-McCray A Division of HMC Enterprises, LLC.
831 East Cayuga Street • Philadelphia,PA 19124 USA • (215) 464-6800 • (800) 344-8222
Fax (215)-969-4890 • E-Mail: TSC@howardmccray.com

SCHEDULE B – LABOR RATES

Item	Allowable Labor hours	Part must be returned
REPAIR MATERIAL/TOOLS NOT EXCEED $200.00		
Compressor Replacement	4.0	Exchange
Compressor components	1.0	No
Replace Evaporator Coil	4.0	Yes
Replace Expansion valve	2.5	Yes
Replace Condenser Fan Motor	2.0	Exchange
Diagnose & repair refrigerant leak, replace sight glass & drier	2.5	No
Diagnose & repair door gasket	1.0	Yes
Diagnose & replace door	1.0	Yes
Electrical Components		
GFCI Light switch	1.0	No
LED Driver	1.0	Yes
Electronic controller	2.0	Yes
Electronic controller sensor	1.0	No
Low pressure switch	2.5	No
Condensate pan	1.0	Yes

Sight glass reimbursement total = $40.00
Filter drier reimbursement total = $40.00

Travel time - Not to exceed 1 hours max charge is $ 125.00
Labor hours - Overtime is not permitted
Reclaim fee - Maximum allowance is $ 50.00 Allowances

SCHEDULE C - PARTS WARRANTY

Some Parts are covered by 1 year Original factory warranty. These parts will be replaced by the original factory supplying these parts or a designated wholesaler as listed.

Hot Wells are covered by APW and all claims must contain APW serial number

Outdoor Condensing units are covered by the refrigeration company supplying the condensing units. These claims must include the condensing unit serial number.

Compressor Components including starter components, relays, condensing fan motors and other related components must be exchanged at the local refrigeration wholesaler within 12 months of date of service or 15 months from factory shipment.

Refrigerant – only the factory specified charge amount will be accepted. The charges are listed on the serial plate. The current Refrigerant rate is $50.00 per LB

Electronics Controls must be returned to factory for reimbursement.

LED lights & drivers must be returned to factory for reimbursement.

It is the responsibility of the repairing refrigeration company to return these parts to HMC in order for the claim to be processed. The part must be MARKED with:
Service Authorization # (SA#)
Model#
Serial #

All reimbursement requests for parts must include wholesaler invoice copy.

Request for Warranty Reimbursement – Schedule D

Howard/McCray
HMC Enterprises LLC
831 E. Cayuga St
Philadelphia, PA 19124

For questions related to Warranty & Service
for Technical Service
TSC@howardmccray.com

Today's Date _____ Date of Service _____

Service Authorization Number (SA#) _____

Model Number _____

Serial Number _____

Service Company _____

Address _____

City _____ State/Province _____

Zip Code _____ Contact Phone Number _____

Email Address _____

Service Performed _____

_____

_____

_____

Labor Rate per hour _____ Labor Hours to perform service_____

Travel Time _____

Checklist

Copy of refrigeration wholesaler invoices for all parts used _____

Original Service invoice from your company _____

Copy or Photo of Compressor Tag _____

Service Authorization on all documents _____

Name & Contact Number _____

ELECTRONIC CONTROLLER

ELECTRONIC CONTROLLER – SETTINGS

Label	Setting	Descriptionn
Set	32	Set Point
Hy	4	Differential
Ot	0	Thermostat Probe Calibration
P2P	Y	Evaporator Probe Presence
AC	1	Anti-Short Cycle Delay
rES	in	Resolution
tdF	EL	Defrost Type
dtE	50	Defrost Termination Temperature
IdF	12	Interval between Defrost Cycle
MdF	120	Maximum Length for Defrost
ALU	45	Maximum Temperature Alarm
ALL	20	Minimum Temperature Alarm
I1P	CL	Digital Input Polarity
did	5	Digital Input Alarm Delay
onF	ES	On/Off Key Enabling
dP3	--	Third Probe Display
dP4	--	Forth Probe Display
rSE	--	Valore Set Operativo

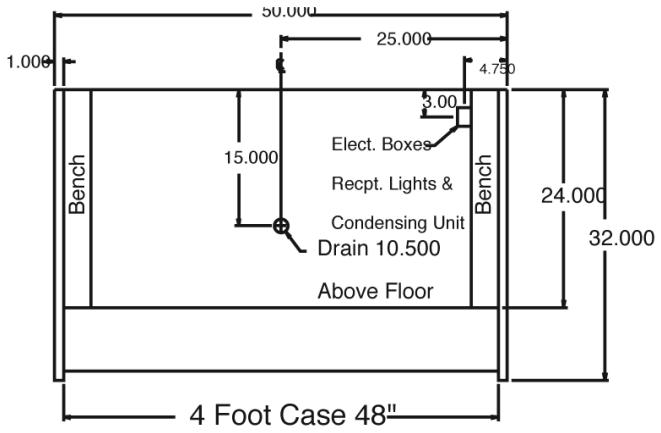

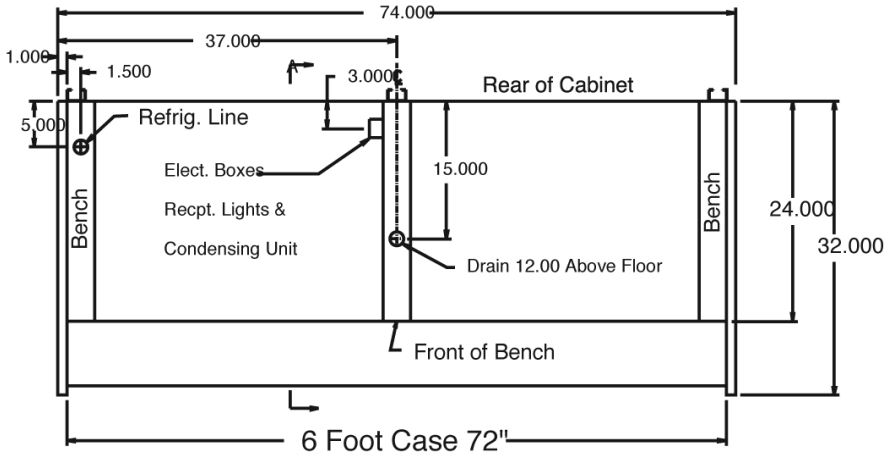

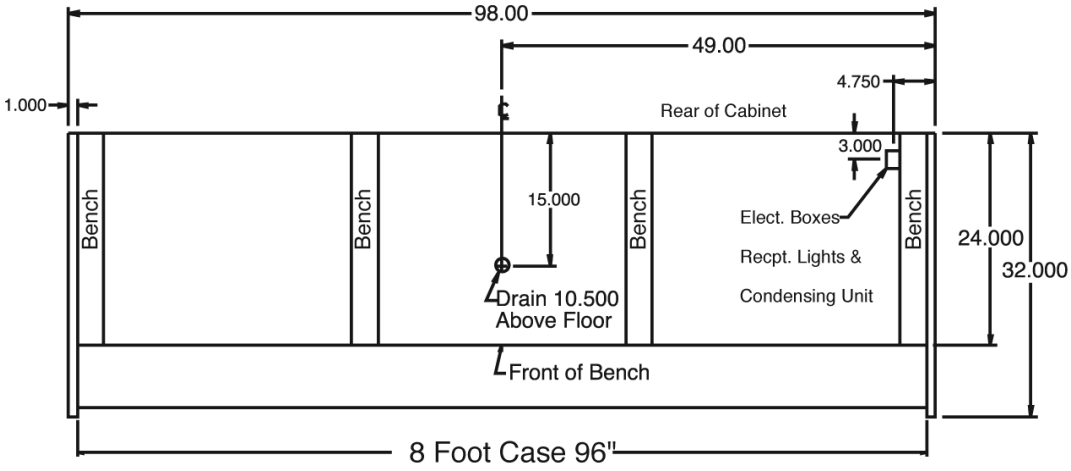

32E Plan Views

Howard-McCray A Division of HMC Enterprises, LLC.
831 East Cayuga Street • Philadelphia,PA 19124 USA • (215) 464-6800 • (800) 344-8222
Fax (215)-969-4890 • E-Mail: TSC@howardmccray.com

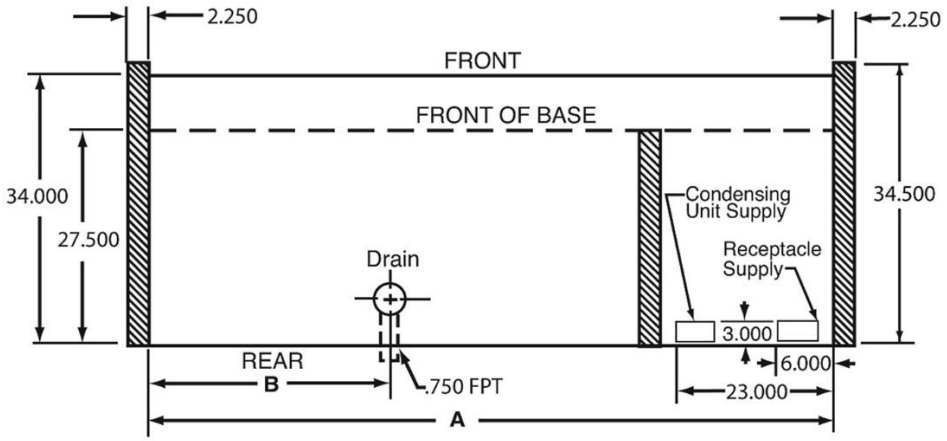

MODEL	A	B
SC-34E-4	48”	12”
SC-34E-6	72”	24”
SC-34E-8	96”	36”
SC-34E-10	120”	48”
SC-34E-12	144”	60”

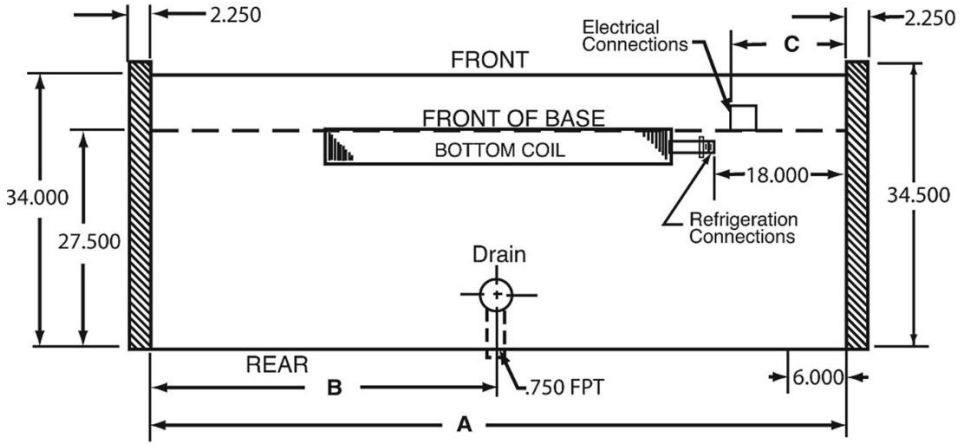

MODEL	A	B	C
R-34E-4	48”	12”	4”
R-34E-6	72”	24”	4”
R-34E-8	96”	36”	52”
R-34E-10	120”	48”	52”
R-34E-12	144”	60”	76”

Howard-McCray A Division of HMC Enterprises, LLC.
831 East Cayuga Street • Philadelphia,PA 19124 USA • (215) 464-6800 • (800) 344-8222
Fax (215)-969-4890 • E-Mail: TSC@howardmccray.com

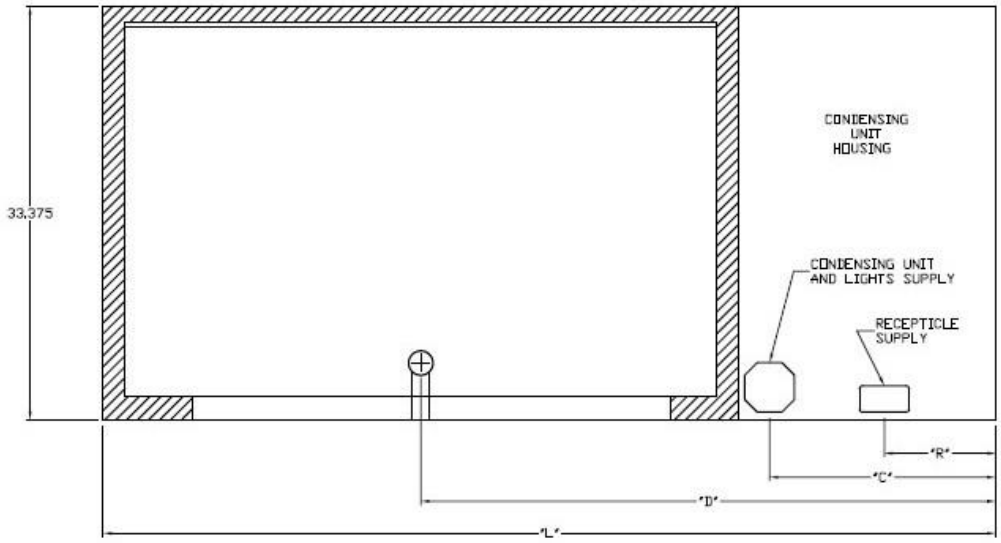

SIZE	DIM "L"	DIM "R"	DIM "C"	DIM "D"
SC-34N-4	48.00	9.00	13.500	32.000
SC-34N-6	72.00	9.00	18.500	46.375
SC-34N-8	96.00	9.00	18.500	58.375
SC-34N-10	120.00	9.00	18.500	70.375
SC-34N-12	144.00	9.00	18.500	82.375

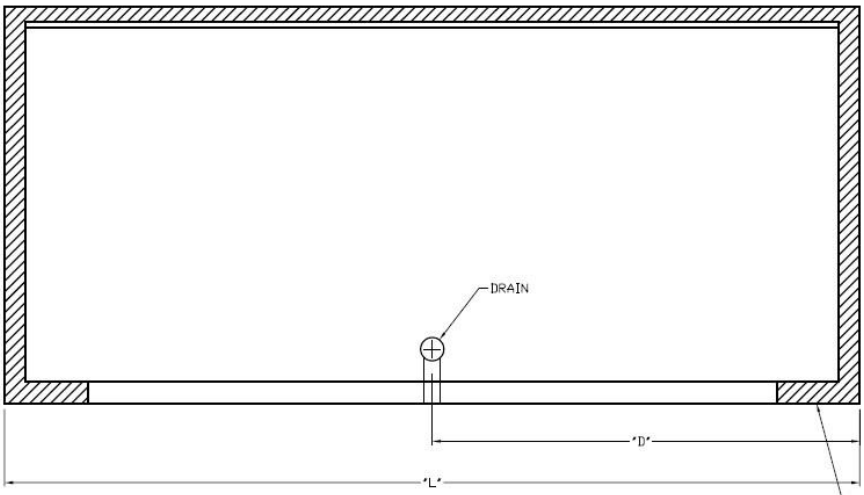

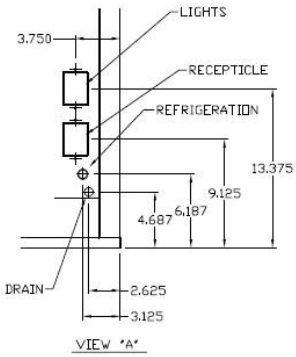

SIZE	DIM "L"	DIM "D"
R-34N-4	48.00	24.00
R-34N-6	72.00	36.00
R-34N-8	96.00	48.00
R-34N-10	120.00	60.00
R-34N-12	144.00	72.00

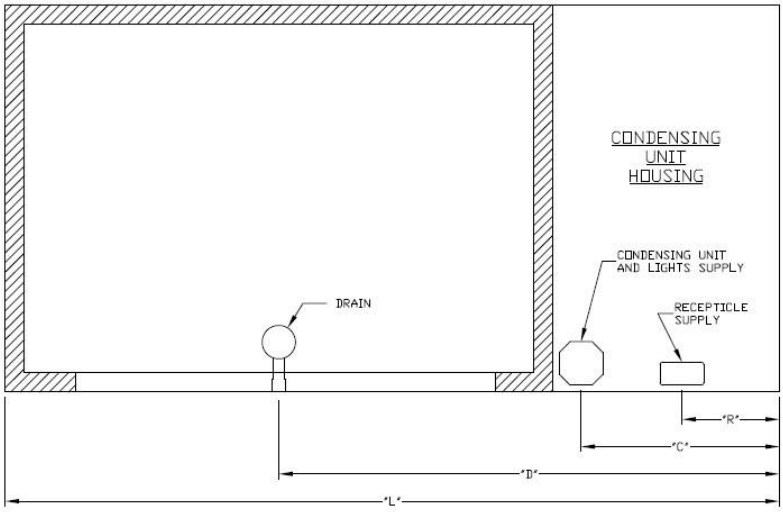

SIZE	DIM "L"	DIM "R"	DIM "C"	DIM "D"
SC-35-4	50.00	9.00	13.500	33.000
SC-35-6	71.00	9.00	18.250	45.875
SC-35-8	95.00	9.00	18.250	57.875
SC-35-10	119.00	9.00	18.250	69.875
SC-35-12	143.00	9.00	18.250	81.875

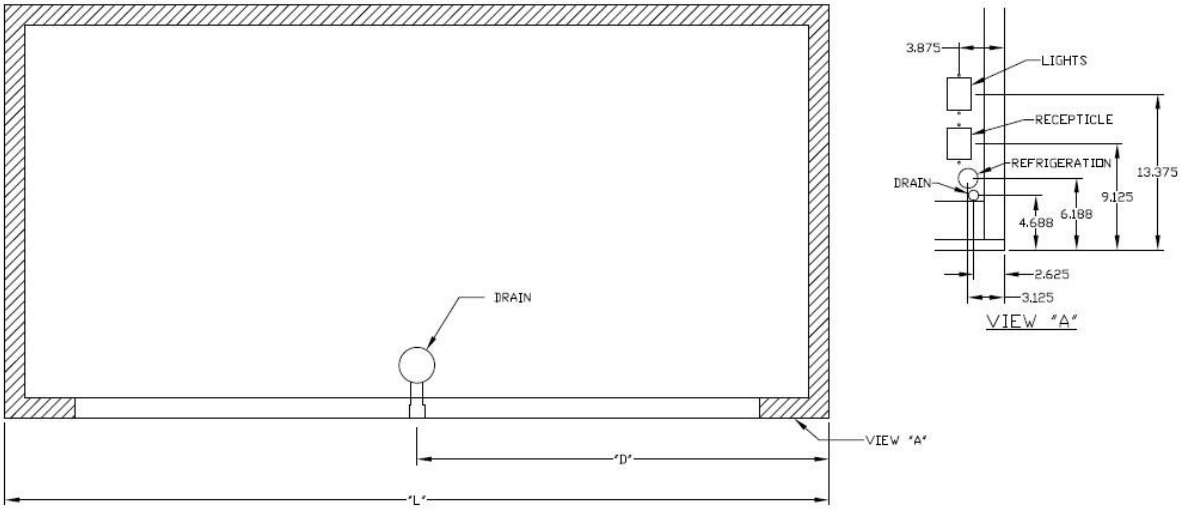

SIZE	DIM "L"	DIM "D"
R-35-4	50.00	25.00
R-35-6	71.00	35.50
R-35-8	95.00	47.50
R-35-10	119.00	59.50
R-35-12	143.00	61.50

Howard-McCray A Division of HMC Enterprises, LLC.
831 East Cayuga Street • Philadelphia,PA 19124 USA • (215) 464-6800 • (800) 344-8222
Fax (215)-969-4890 • E-Mail: TSC@howardmccray.com

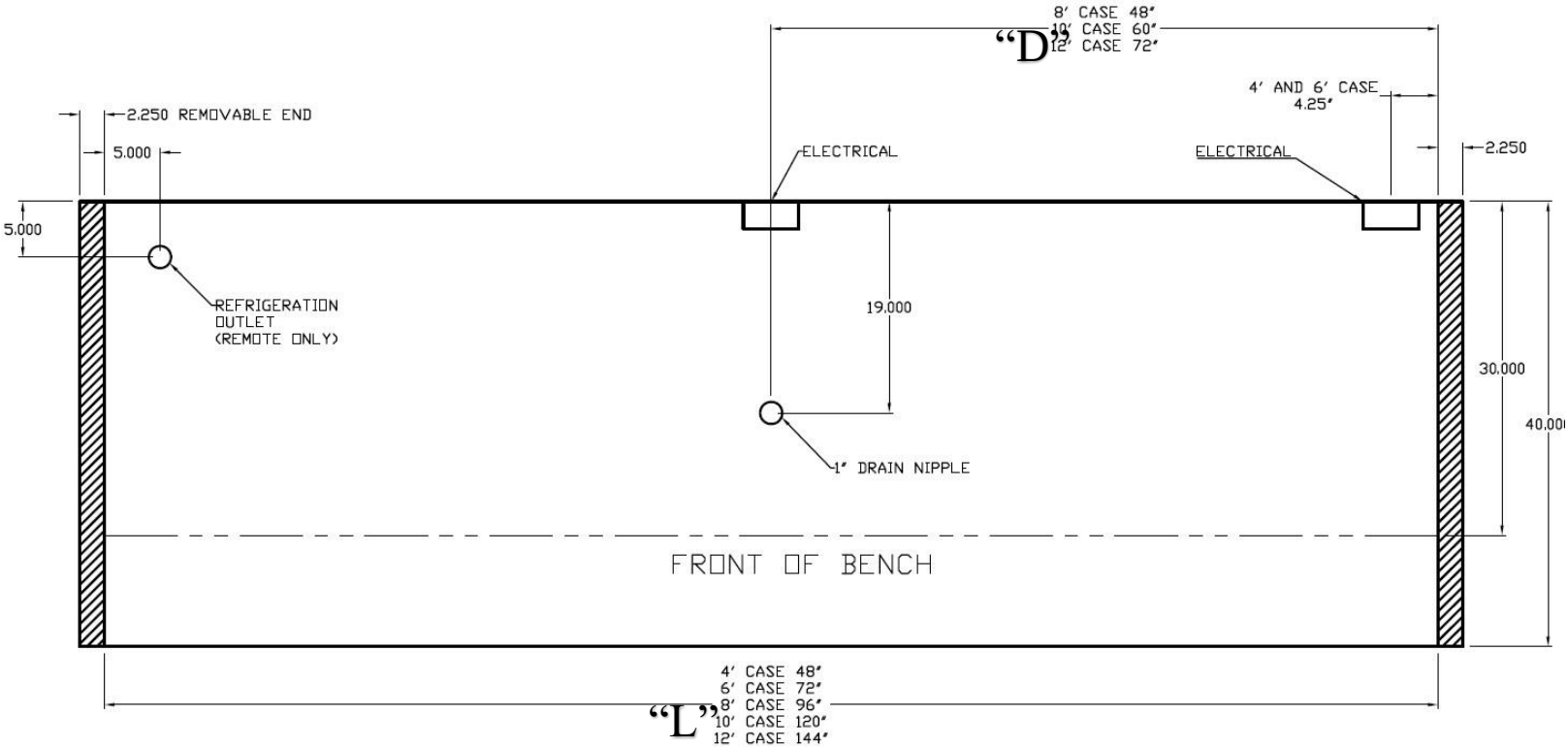

SIZE	DIM "L"	DIM "D"
SC/R-40E-4	48.00	4.25
SC/R-40E-6	72.00	4.25
SC/R-40E-8	96.00	48.00
SC/R-40E-10	120.00	60.00
SC/R-40E-12	144.00	72.00

Howard-McCray A Division of HMC Enterprises, LLC.
831 East Cayuga Street • Philadelphia,PA 19124 USA • (215) 464-6800 • (800) 344-8222
Fax (215)-969-4890 • E-Mail: TSC@howardmccray.com

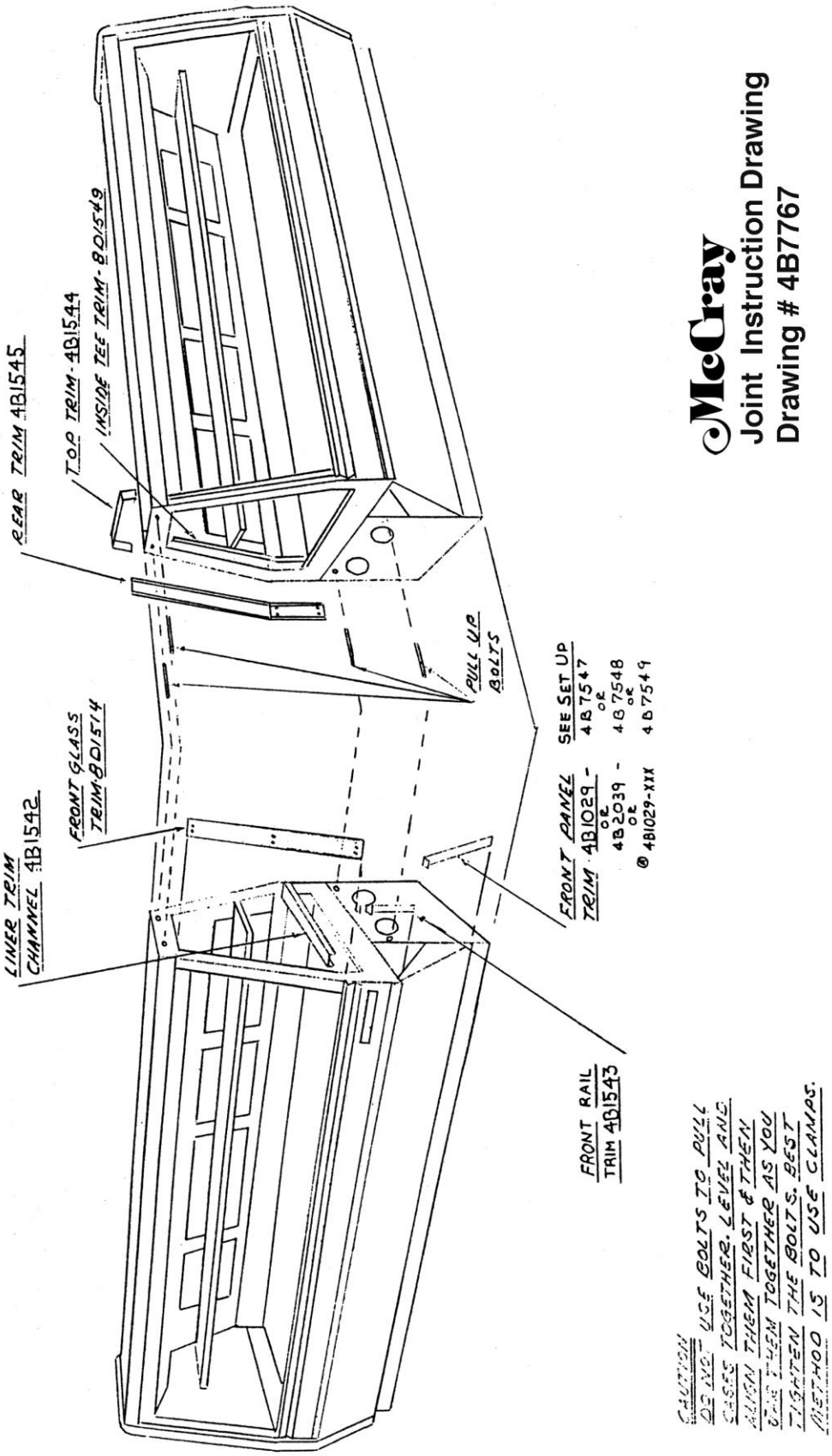

McCray
Joint Instruction Drawing
Drawing # 4B7767

Howard-McCray A Division of HMC Enterprises, LLC.
831 East Cayuga Street • Philadelphia,PA 19124 USA • (215) 464-6800 • (800) 344-8222
Fax (215)-969-4890 • E-Mail: TSC@howardmccray.com

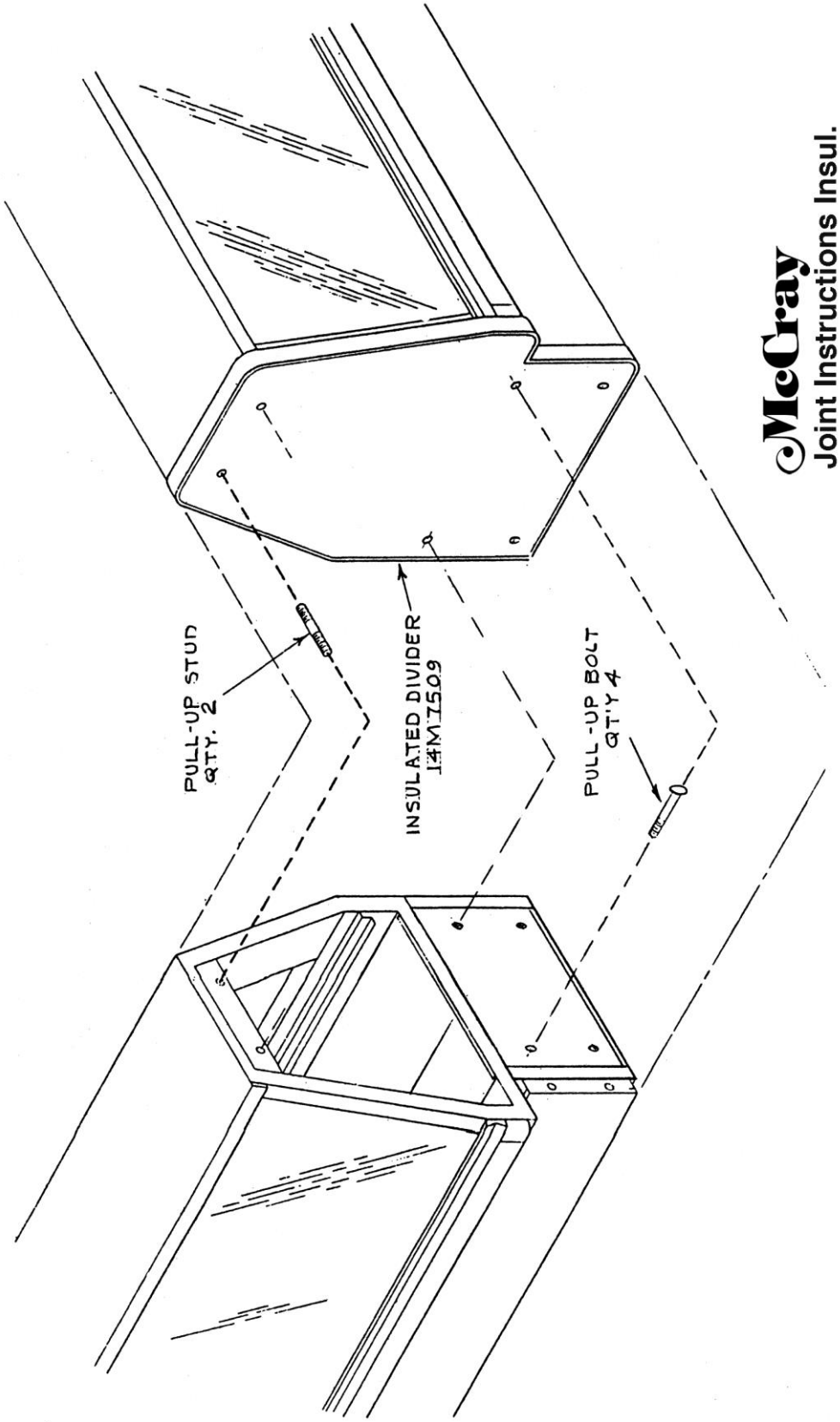

McCray
Joint Instructions Insul.
Divider, Drawung #14M7801

Howard-McCray A Division of HMC Enterprises, LLC.
831 East Cayuga Street • Philadelphia,PA 19124 USA • (215) 464-6800 • (800) 344-8222
Fax (215)-969-4890 • E-Mail: TSC@howardmccray.com

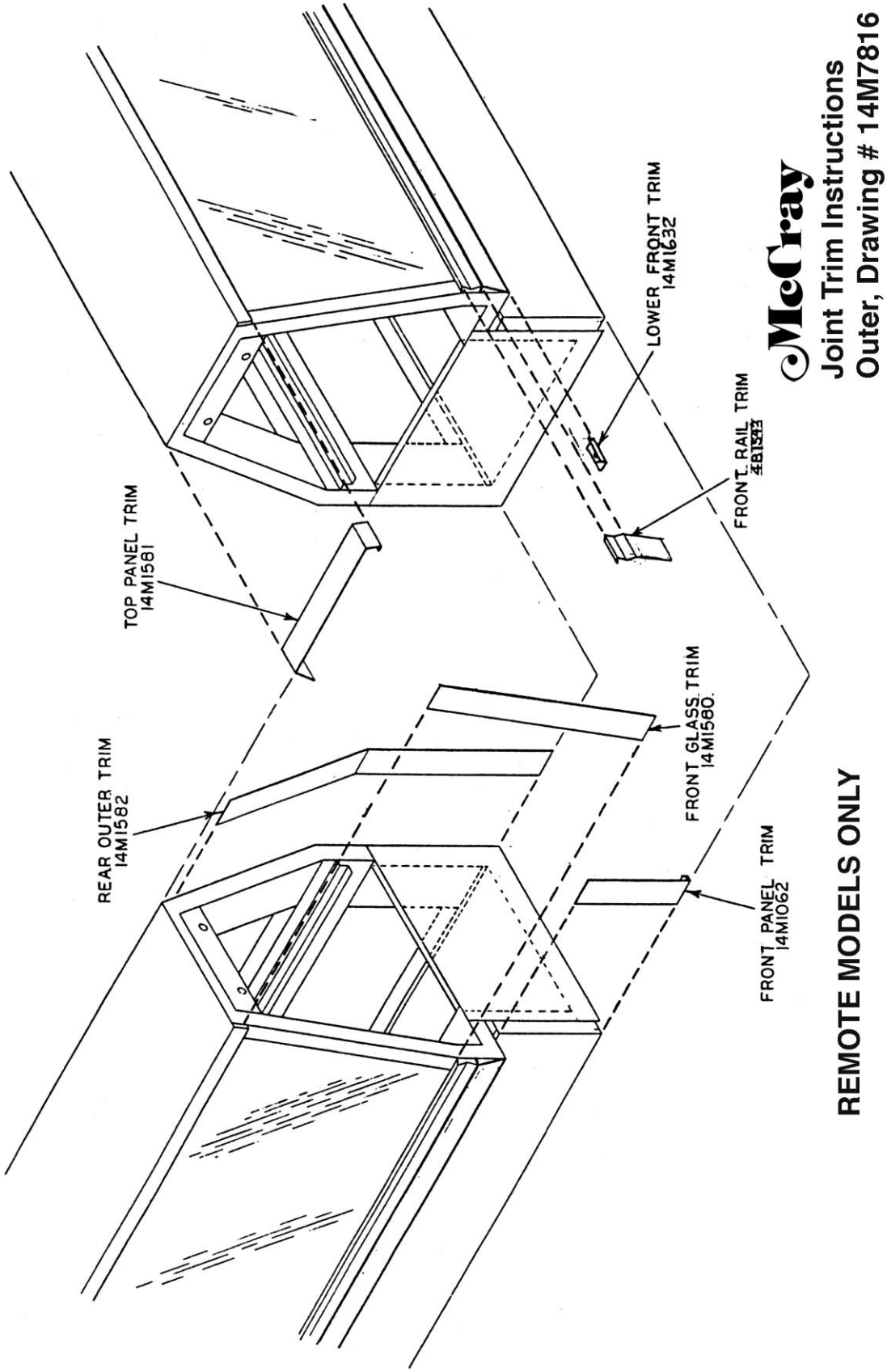

McCray
Joint Trim Instructions
Outer, Drawing # 14M7816

REMOTE MODELS ONLY

Howard-McCray A Division of HMC Enterprises, LLC.
831 East Cayuga Street • Philadelphia,PA 19124 USA • (215) 464-6800 • (800) 344-8222
Fax (215)-969-4890 • E-Mail: TSC@howardmccray.com

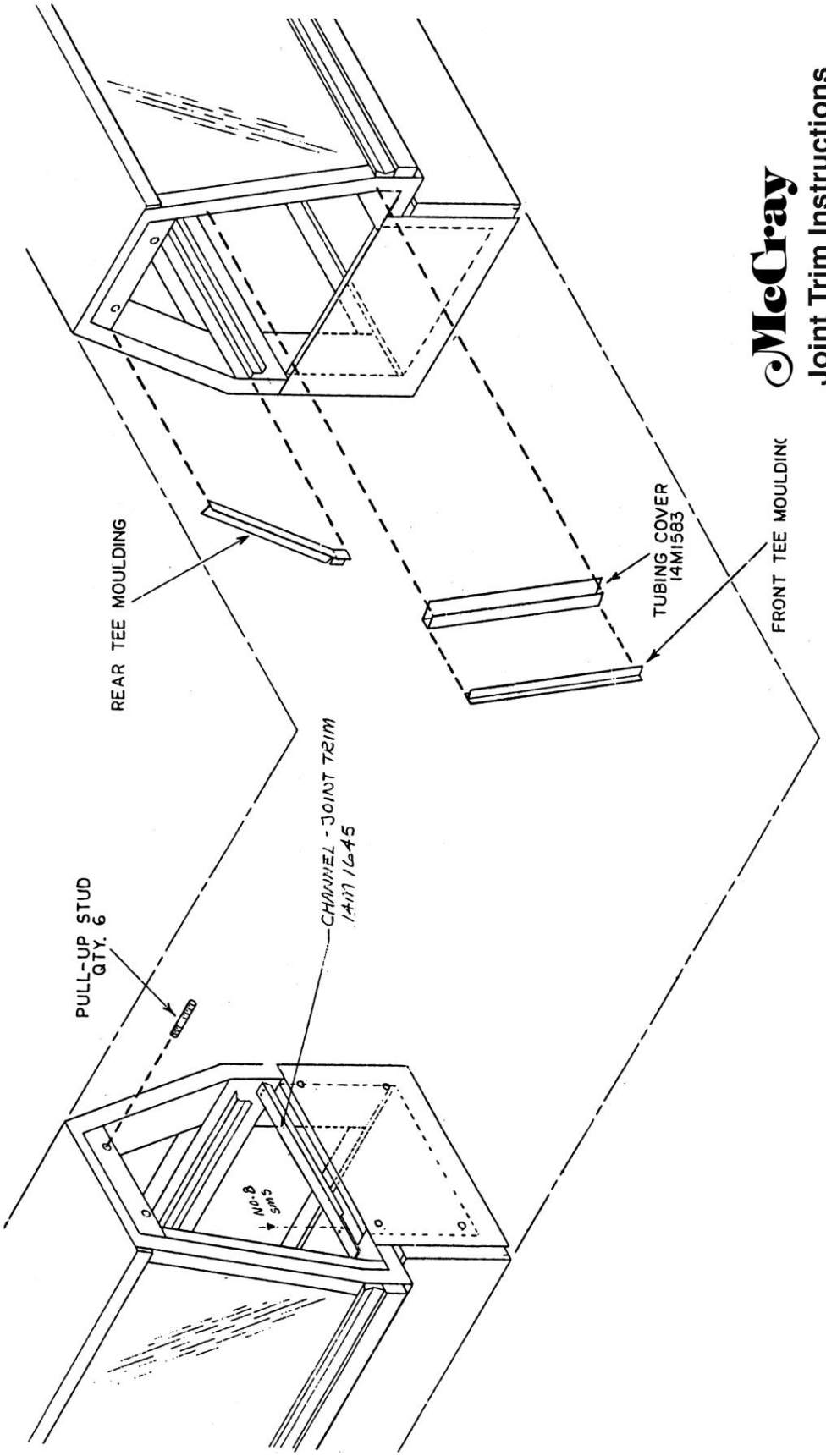

McCray

Joint Trim Instructions
Inner, Drawing #14M7815

REMOTE MODELS ONLY

Howard-McCray A Division of HMC Enterprises, LLC.
831 East Cayuga Street • Philadelphia,PA 19124 USA • (215) 464-6800 • (800) 344-8222
Fax (215)-969-4890 • E-Mail: TSC@howardmccray.com

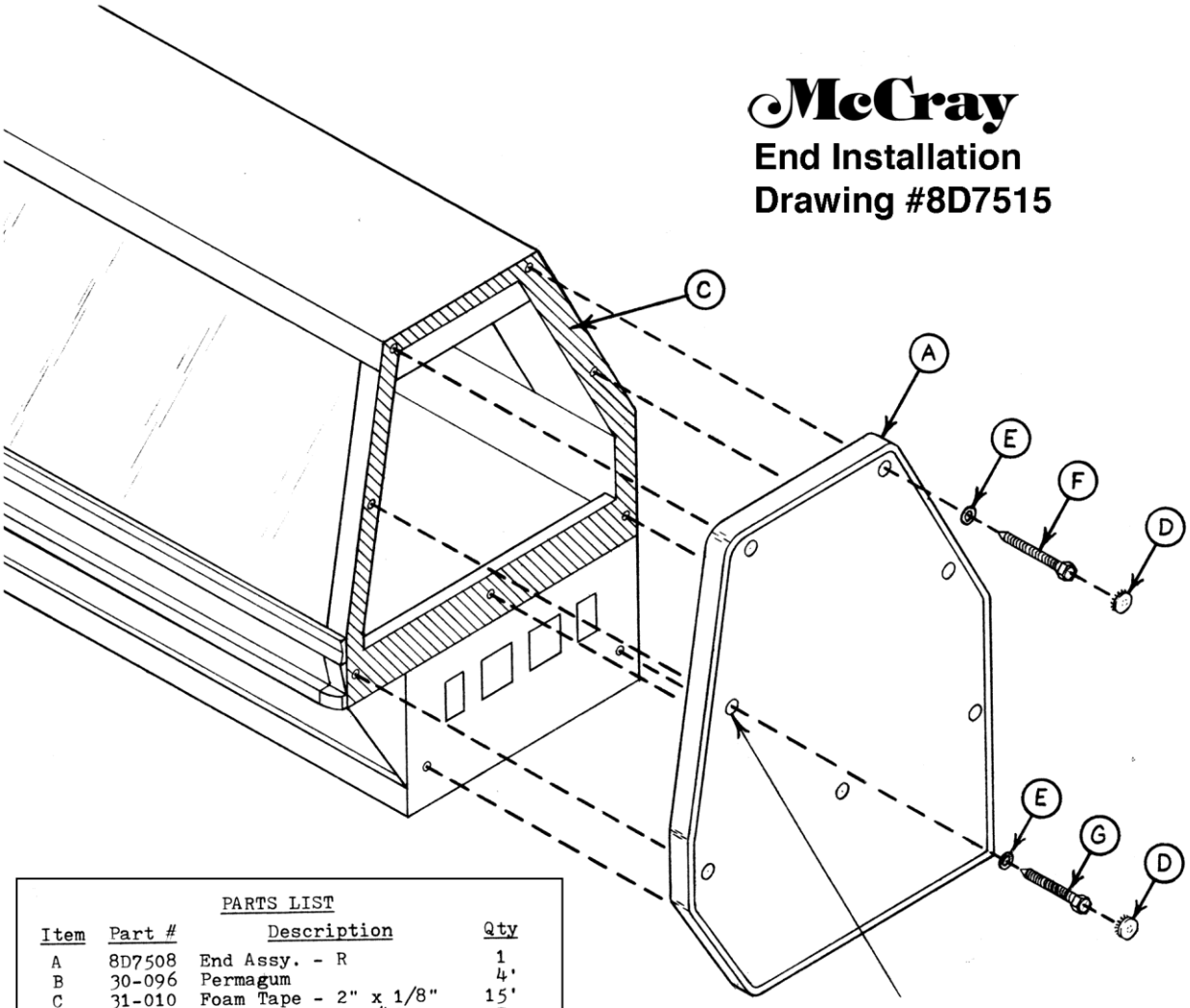

PARTS LIST

Item	Part #	Description	Qty
A	8D7508	End Assy. - R	1
B	30-096	Permagum	4'
C	31-010	Foam Tape - 2" x 1/8"	15'
D	80-059	Chrome Plug - 3/4"	7
E	81-011	Flat Washer - 5/8"	7
F	81-021	Hex Hd. Screw - #14 x 2"	6
G	81-041	Hex Hd. Screw - #14 x 1½"	1

END INSTALLATION INSTRUCTIONS

1) Place Foam Tape (31-010) on end of case as shown
2) Install all Screws and Washers
   (1-1/2" Screw in the center front hole ONLY)
3) Pull-up end to case with Screws-SNUG NOT TIGHT
4) Tighten Front Screws
5) Tighten remaining Screws
6) Fill holes with Permagum (30-096)
7) Cover holes with Chrome Plugs (80-059)

Howard-McCray A Division of HMC Enterprises, LLC.
831 East Cayuga Street • Philadelphia,PA 19124 USA • (215) 464-6800 • (800) 344-8222
Fax (215)-969-4890 • E-Mail: TSC@howardmccray.com

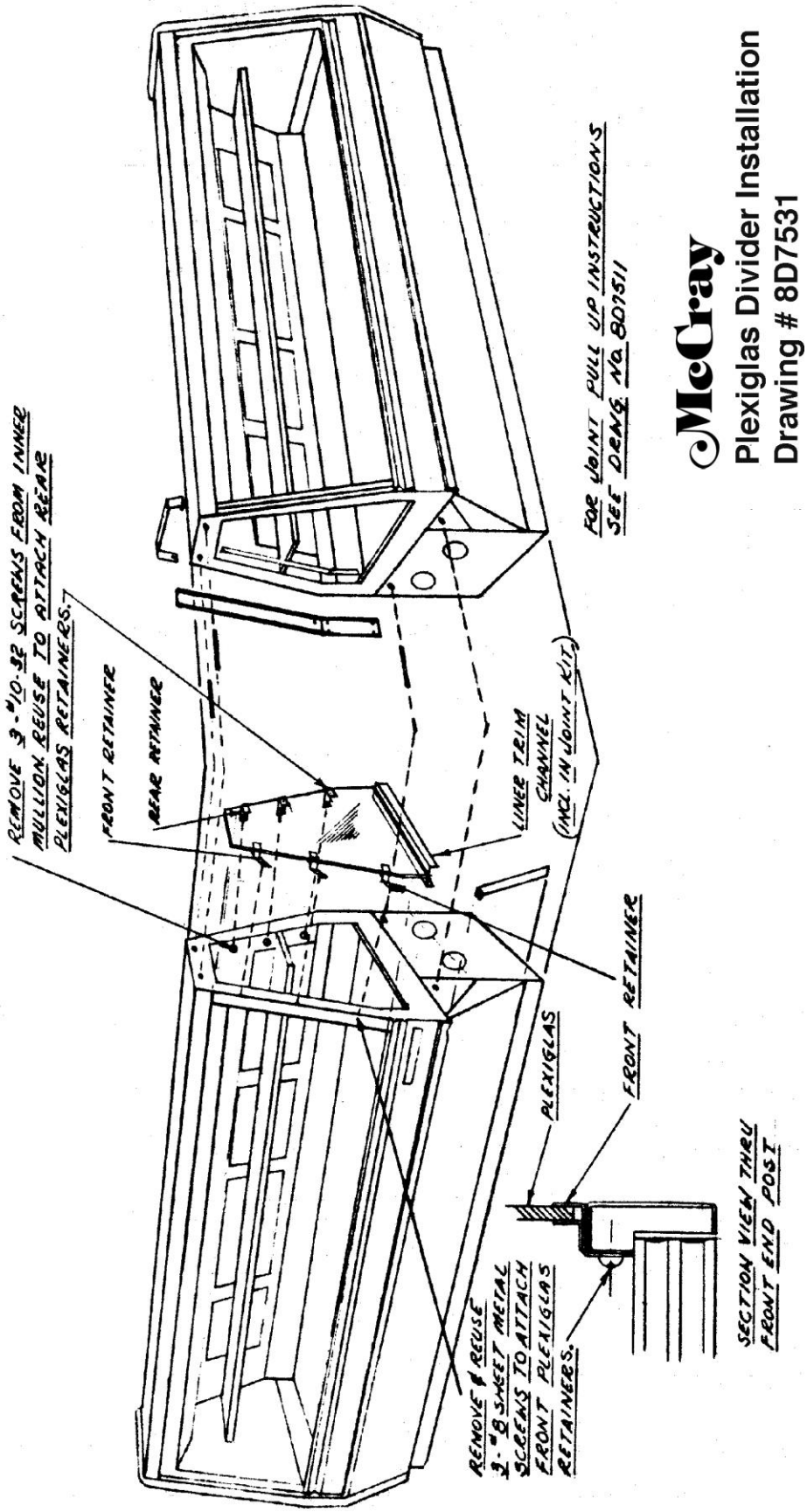

McCray
Plexiglas Divider Installation
Drawing # 8D7531

Howard-McCray A Division of HMC Enterprises, LLC.
831 East Cayuga Street • Philadelphia,PA 19124 USA • (215) 464-6800 • (800) 344-8222
Fax (215)-969-4890 • E-Mail: TSC@howardmccray.com

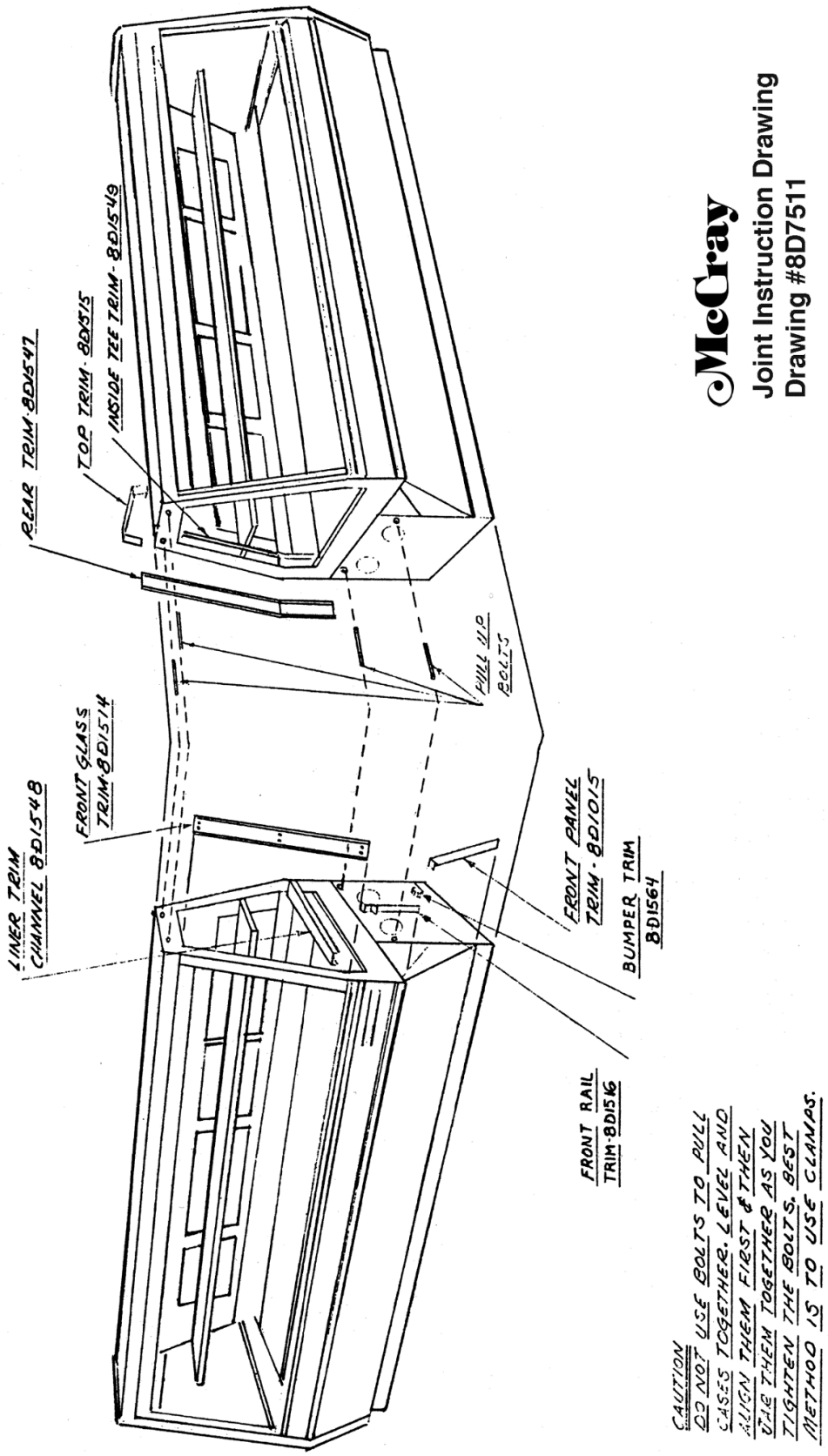

McCray
Joint Instruction Drawing
Drawing #8D7511

Howard-McCray A Division of HMC Enterprises, LLC.
831 East Cayuga Street • Philadelphia,PA 19124 USA • (215) 464-6800 • (800) 344-8222
Fax (215)-969-4890 • E-Mail: TSC@howardmccray.com

4 & 6 REMOTE WIRING DIGRAM

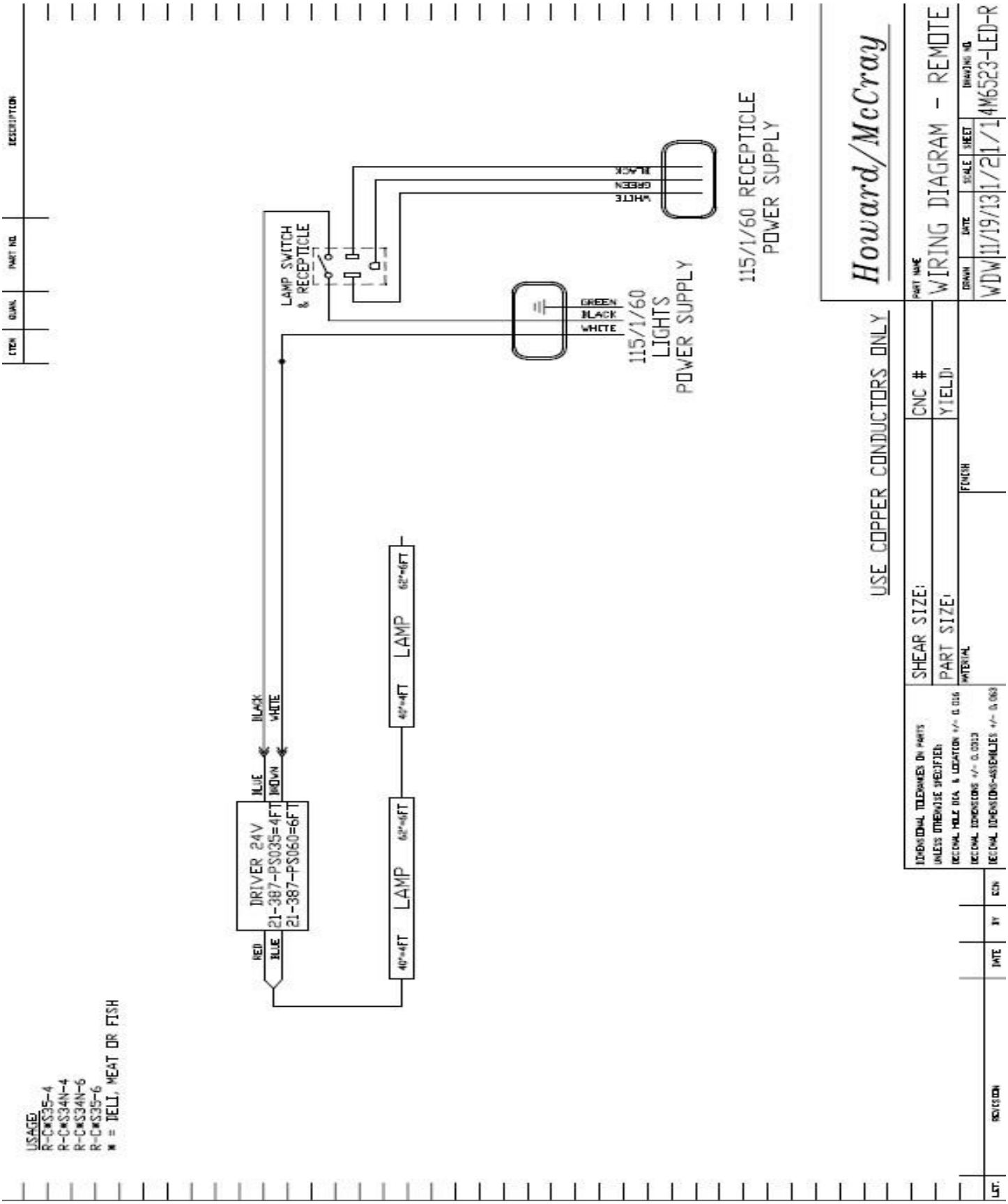

Howard-McCray A Division of HMC Enterprises, LLC.
831 East Cayuga Street • Philadelphia,PA 19124 USA • (215) 464-6800 • (800) 344-8222
Fax (215)-969-4890 • E-Mail: TSC@howardmccray.com

8FT & 10FT & 12FT REMOTE WIRING DIAGRAM

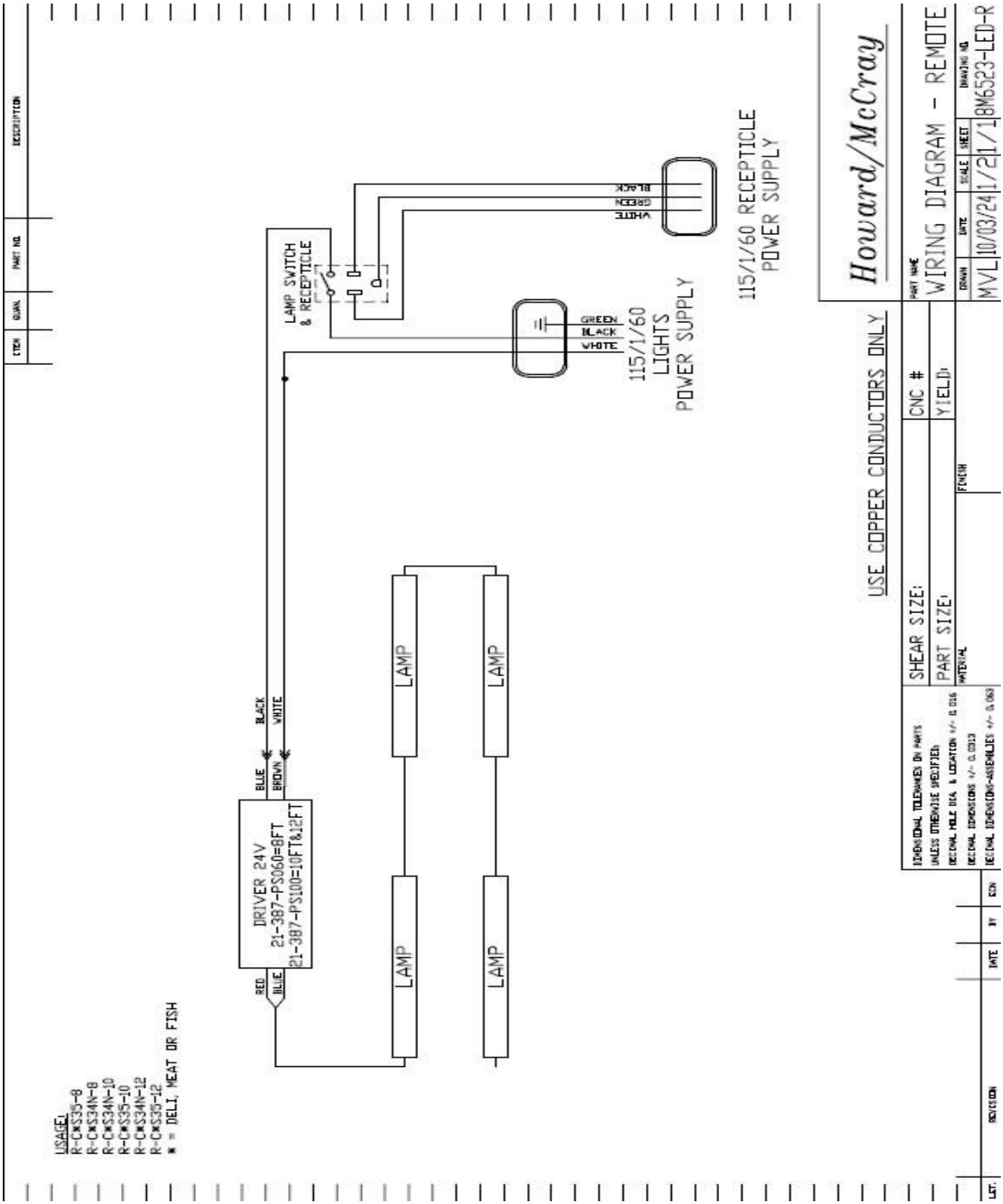

Howard-McCray A Division of HMC Enterprises, LLC.
831 East Cayuga Street • Philadelphia,PA 19124 USA • (215) 464-6800 • (800) 344-8222
Fax (215)-969-4890 • E-Mail: TSC@howardmccray.com

4FT SC WIRING DIAGRAM

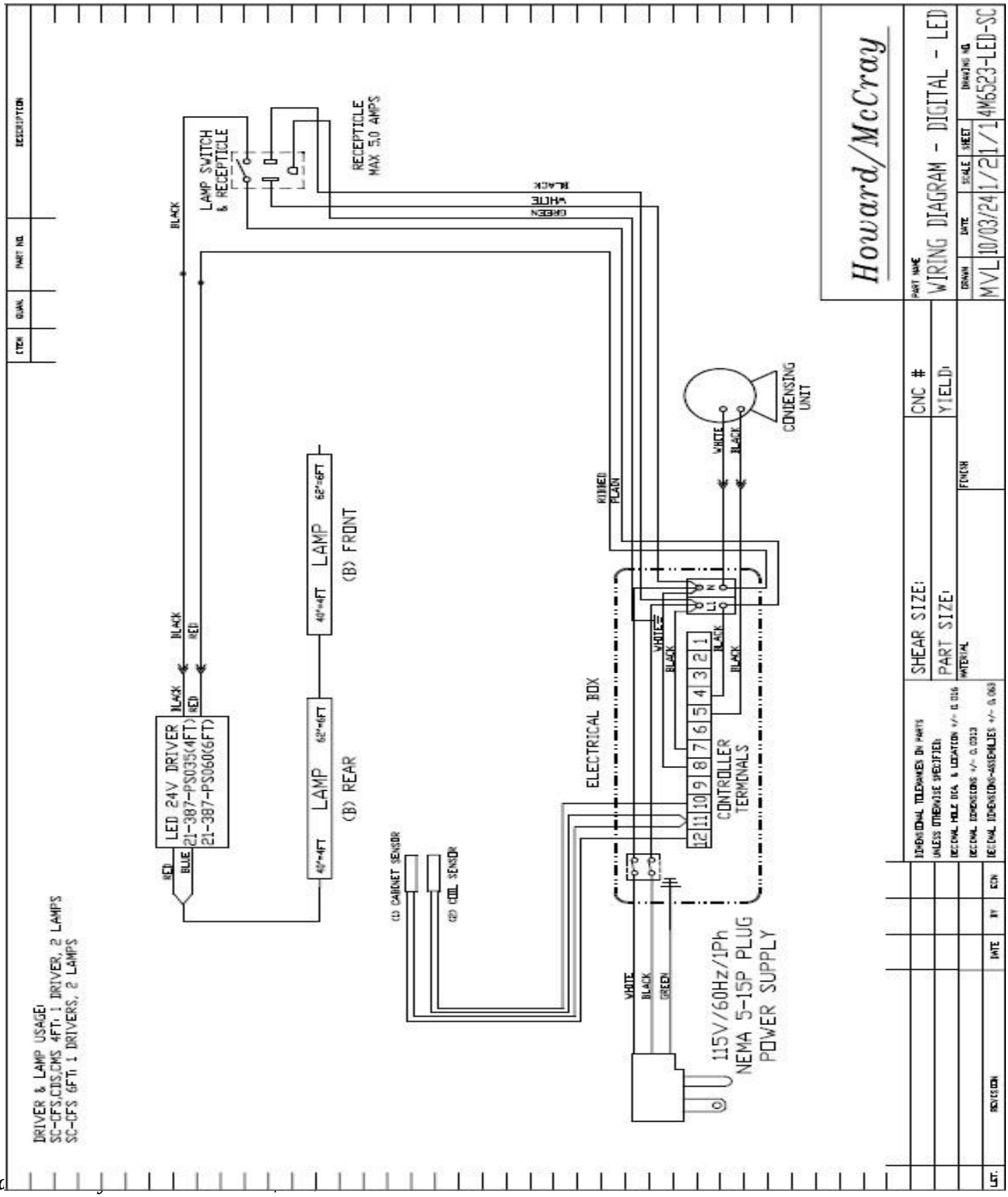

Howard-McCray
831 East Cayuga Street • Philadelphia,PA 19124 USA • (215) 464-6800 • (800) 344-8222
Fax (215)-969-4890 • E-Mail: TSC@howardmccray.com

6FT SC WIRING DIAGAM

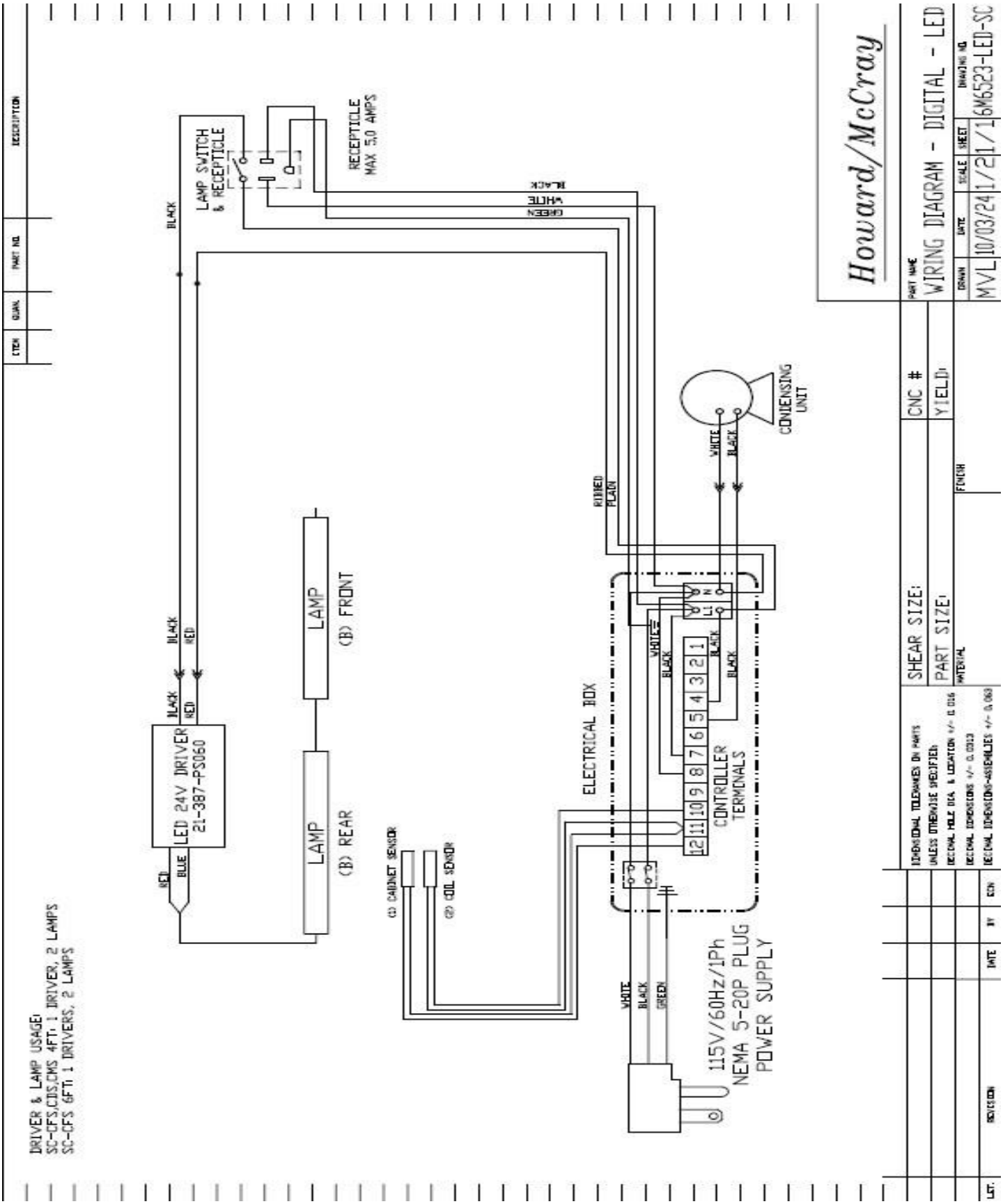

Howard-McCray A Division of HMC Enterprises, LLC.
831 East Cayuga Street • Philadelphia,PA 19124 USA • (215) 464-6800 • (800) 344-8222
Fax (215)-969-4890 • E-Mail: TSC@howardmccray.com

8FT & 10FT & 12FT SC WIRING DIAGRAM

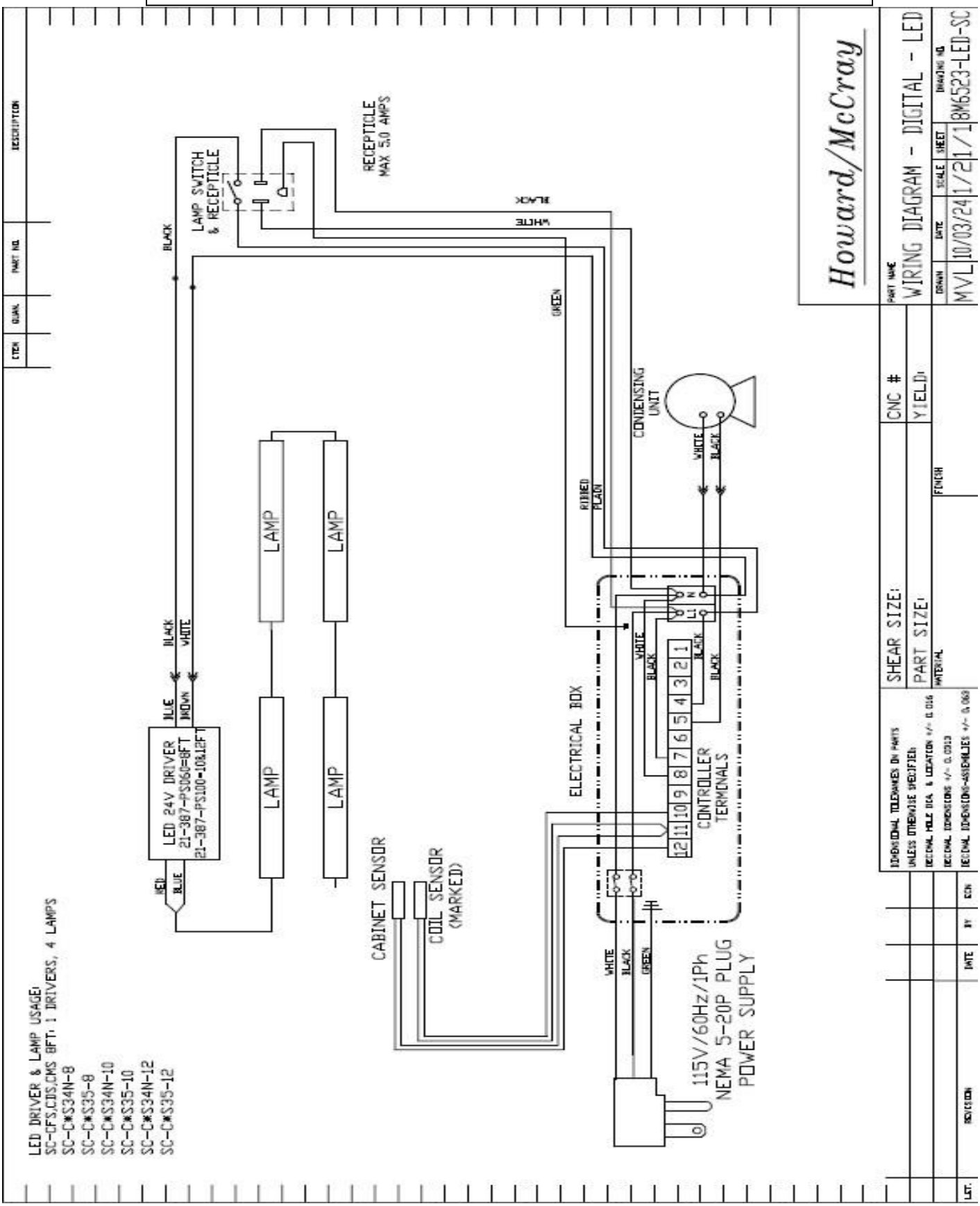

Howard-McCray A Division of HMC Enterprises, LLC.
831 East Cayuga Street • Philadelphia,PA 19124 USA • (215) 464-6800 • (800) 344-8222
Fax (215)-969-4890 • E-Mail: TSC@howardmccray.com

DISPLAY CASE LEG INSTALLATION

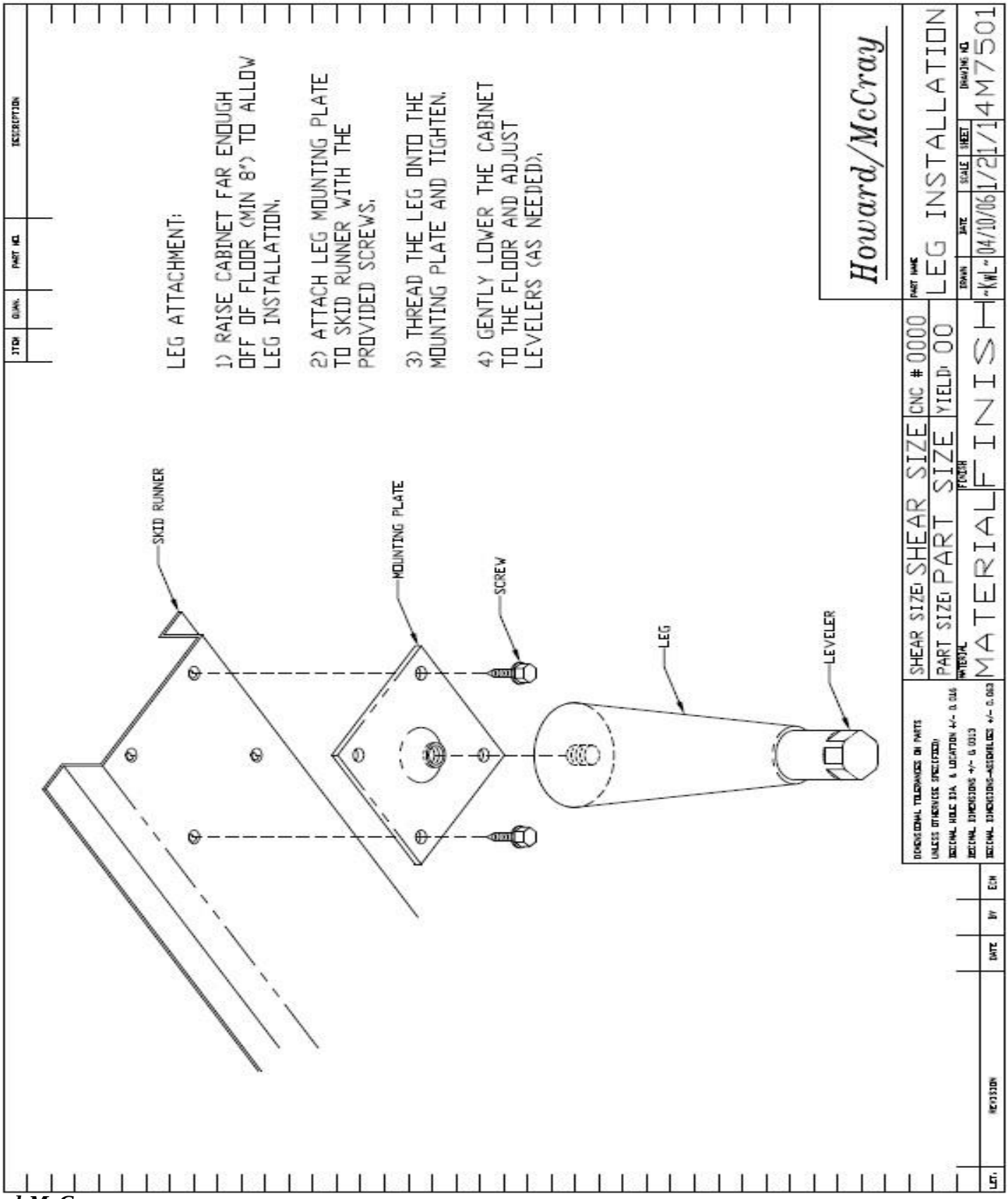

Howard-McCray A Division of HMC Enterprises, LLC.
831 East Cayuga Street • Philadelphia,PA 19124 USA • (215) 464-6800 • (800) 344-8222
Fax (215)-969-4890 • E-Mail: TSC@howardmccray.com

LOUVER INSTRUCTIONS

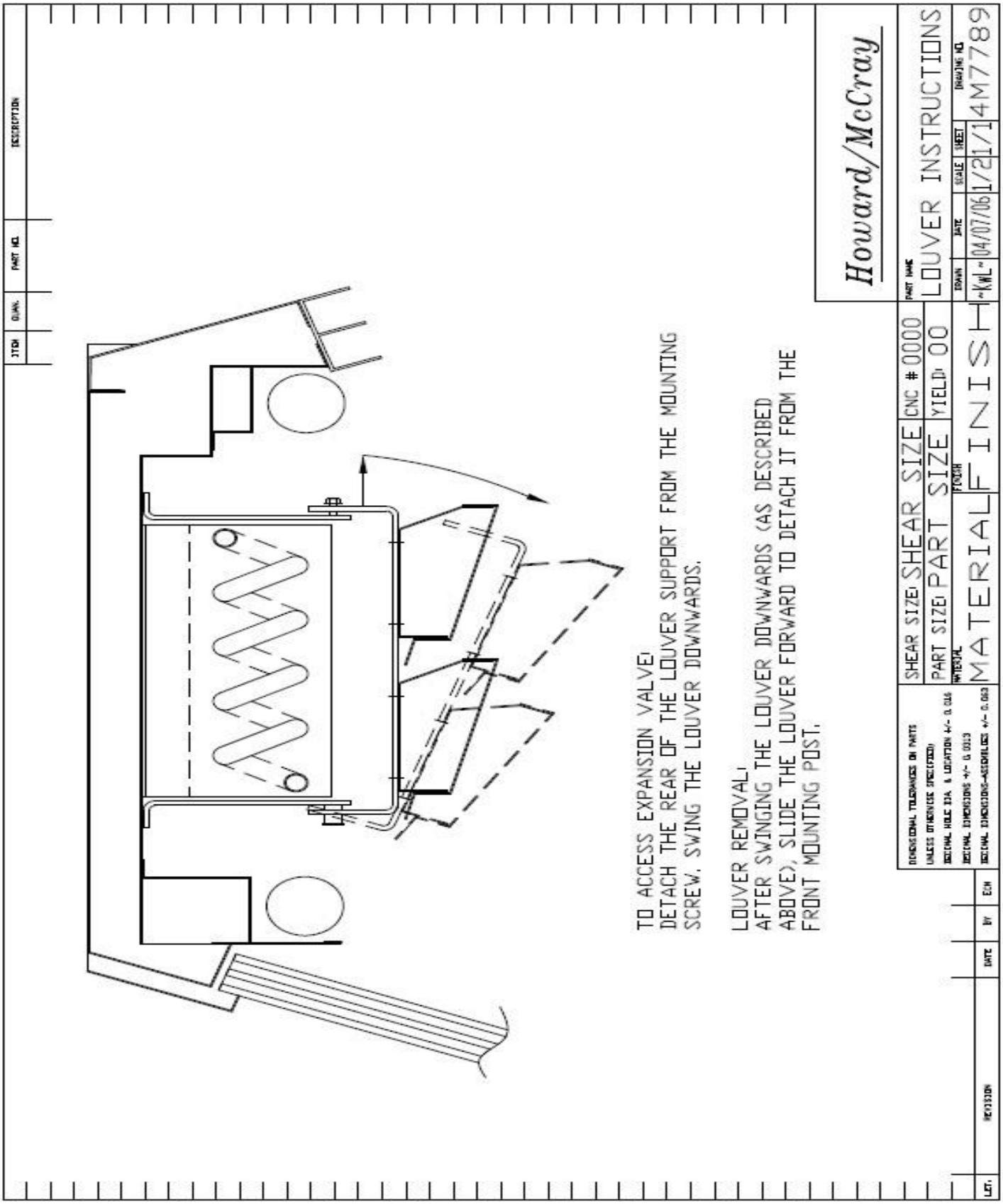

Howard-McCray A Division of HMC Enterprises, LLC.
831 East Cayuga Street • Philadelphia,PA 19124 USA • (215) 464-6800 • (800) 344-8222
Fax (215)-969-4890 • E-Mail: TSC@howardmccray.com

34N & 35 LED LAMP DRIVER ACCESS

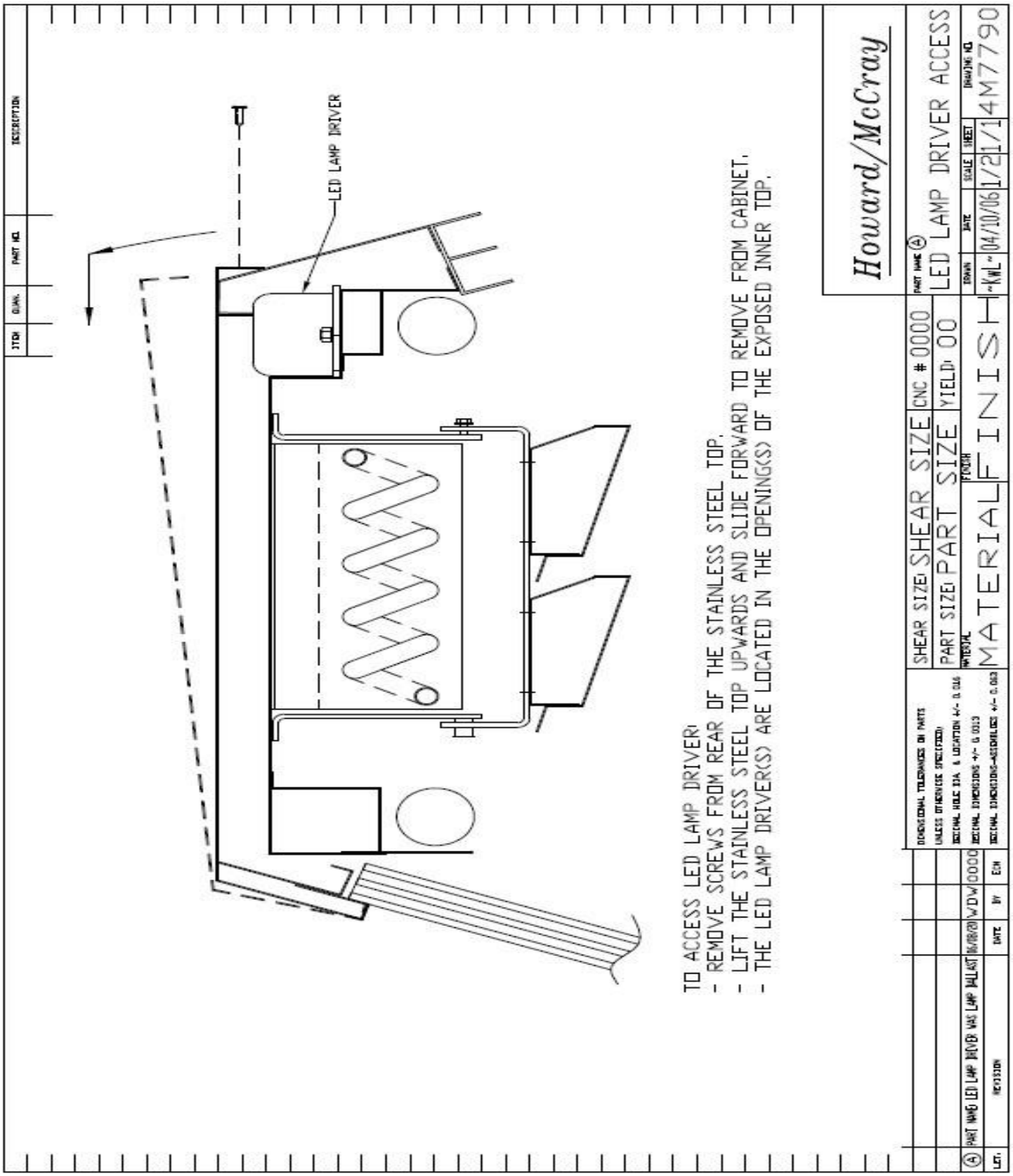

Howard-McCray A Division of HMC Enterprises, LLC.
831 East Cayuga Street • Philadelphia,PA 19124 USA • (215) 464-6800 • (800) 344-8222
Fax (215)-969-4890 • E-Mail: TSC@howardmccray.com

32E LED LAMP DRIVER

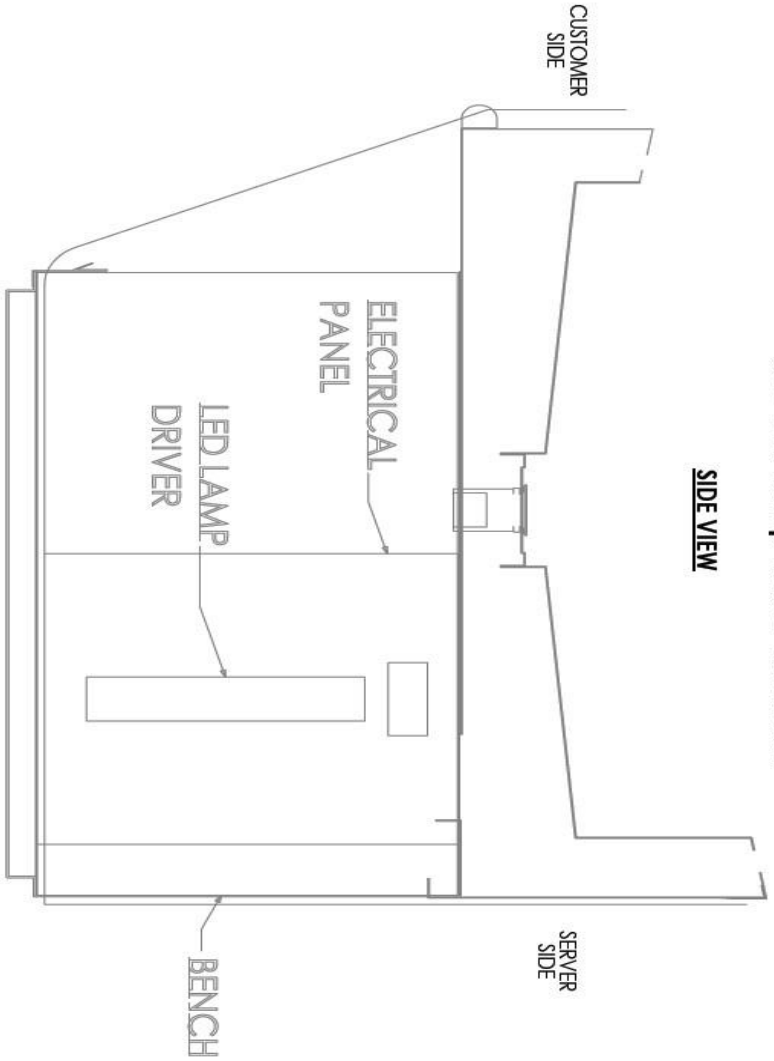

TO ACCESS LED LAMP DRIVER:

- From the server side on the left, remove the screws from the bottom panel
- Remove the bottom panel to expose the electrical panel
- Remove the two (2) screws on the right of the electrical panel that attaches it to the bench
- Remove the electrical panel
- The LED lamp driver is located on the backside of the electrical panel

			DIMENSIONAL TOLERANCES ON PARTS UNLESS OTHERWISE SPECIFIED: DECIMAL HOLE DIA. & LOCATION +/- 0.016 DECIMAL DIMENSIONS +/- 0.0313 DECIMAL DIMENSIONS-ASSEMBLIES +/- 0.063	SHEAR SIZE: SHEAR SIZE	CNC # 0000	PART NAME LED LAMP DRIVER LOCATION
				PART SIZE: MATERIAL	YIELD: 00	DRAWN SSA / DATE 8/16/2024 / SCALE 1:4 / SHEET 1/1 / DRAWING NO. 4B7790
REVISION	MM/DD/YY	HMc	0000	FINISH		
LET. REVISION	DATE	BY	ECN			

Howard McCray

Howard-McCray A Division of HMC Enterprises, LLC.
831 East Cayuga Street • Philadelphia,PA 19124 USA • (215) 464-6800 • (800) 344-8222
Fax (215)-969-4890 • E-Mail: TSC@howardmccray.com

34E LED LAMP DRIVER

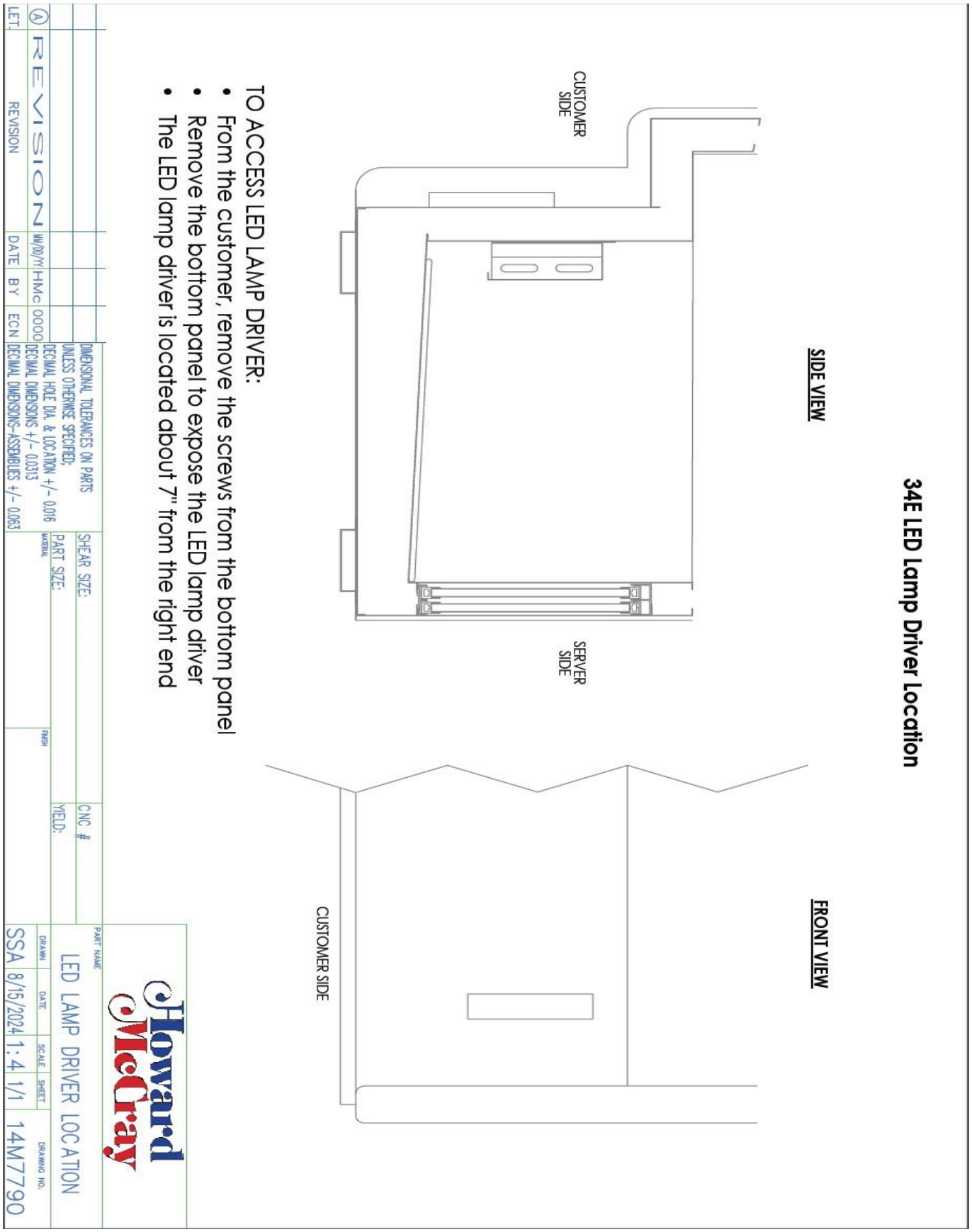

Howard-McCray A Division of HMC Enterprises, LLC.
831 East Cayuga Street • Philadelphia,PA 19124 USA • (215) 464-6800 • (800) 344-8222
Fax (215)-969-4890 • E-Mail: TSC@howardmccray.com

40E LED DRIVER ACCESS

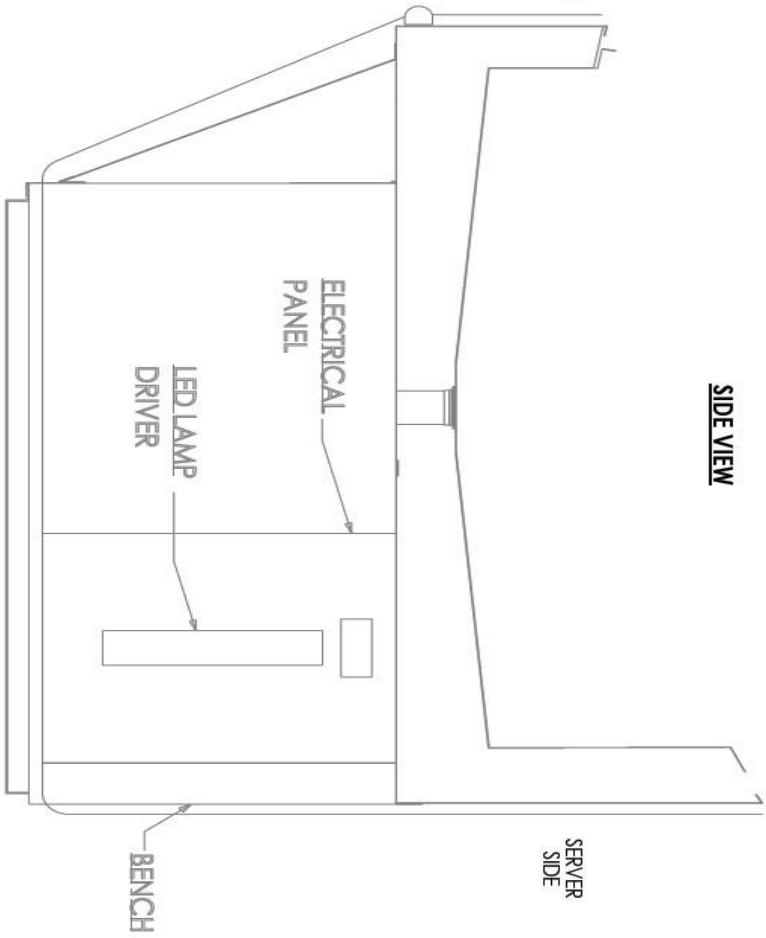

TO ACCESS LED LAMP DRIVER:

- From the server side on the left, remove the screws from the bottom panel
- Remove the bottom panel to expose the electrical panel
- Remove the two (2) screws on the right of the electrical panel that attaches it to the bench
- Remove the electrical panel
- The LED lamp driver is located on the backside of the electrical panel

REVISION				
LET.	REVISION	DATE	BY	ECN
A		MM/DD/YY	HMc	0000

DIMENSIONAL TOLERANCES ON PARTS UNLESS OTHERWISE SPECIFIED; DECIMAL HOLE DIA. & LOCATION +/- 0.016 DECIMAL DIMENSIONS +/- 0.031 DECIMAL DIMENSIONS-ASSEMBLIES +/- 0.063

SHEAR SIZE: SHEAR SIZE | CNC # 0000
PART SIZE: MATERIAL | FINISH | YIELD: 00

Howard McCray

PART NAME: LED LAMP DRIVER LOCATION

DRAWN	DATE	SCALE	SHEET	DRAWING NO.
SSA	8/16/2024	1:5	1/1	4D7790

SKID CLOSE OFF MTG INSTRUCTIONS

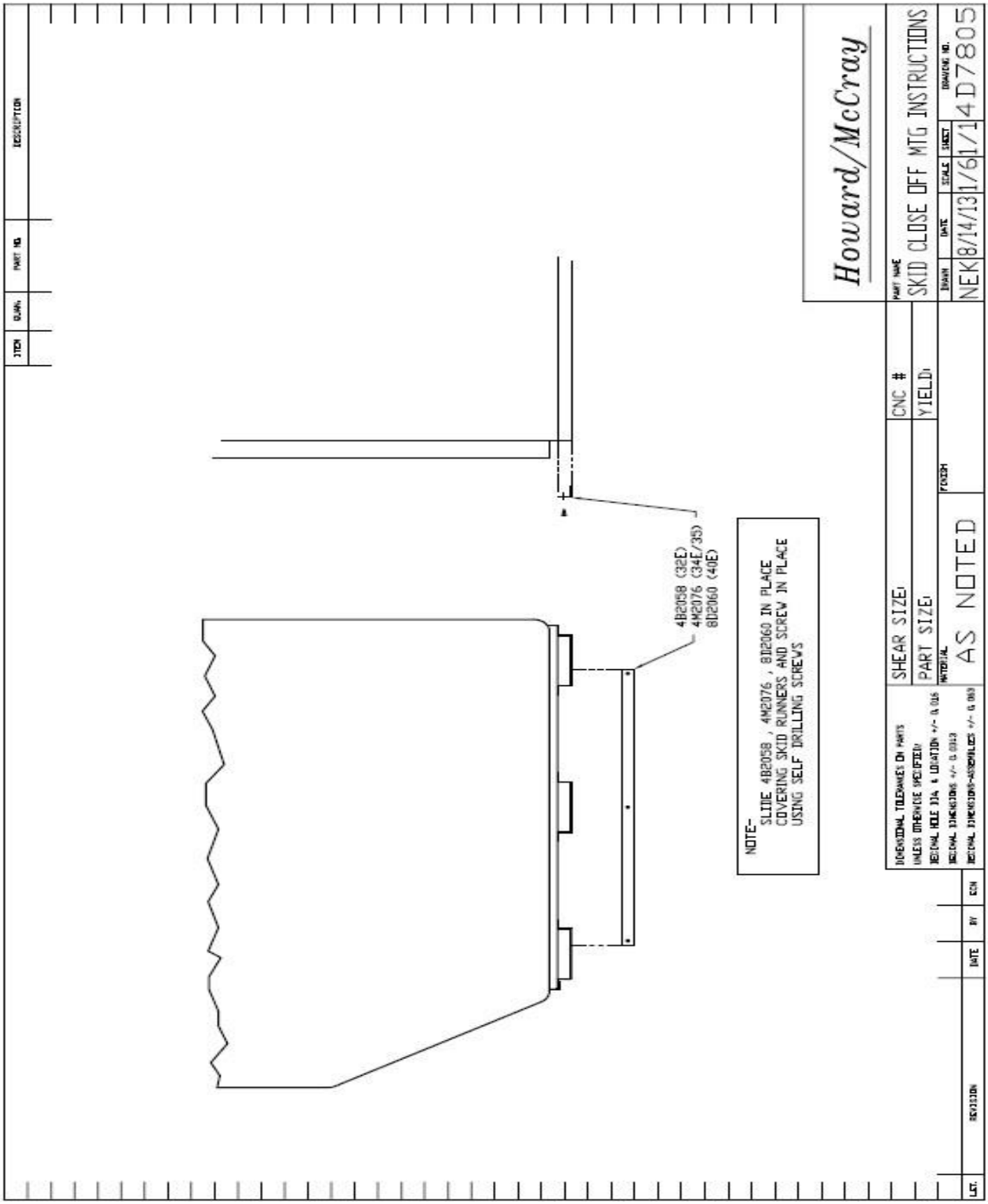

Howard-McCray A Division of HMC Enterprises, LLC.
831 East Cayuga Street • Philadelphia,PA 19124 USA • (215) 464-6800 • (800) 344-8222
Fax (215)-969-4890 • E-Mail: TSC@howardmccray.com